Published: 11-May-2011

Transfer Case -

Sealers and Lubricants

Item	Specification
* Recommended oil	Shell TF 0753
Capacity - Wet and dry fill	1.5 litres, (2.6 pints) (1.5 US quarts)
Input shaft splines grease	Weicon TL7391
Sealant	STC 50550 or Loctite 5900

*** CAUTION:** Do not use any lubricant other than that specified

General Specification

Item	Specification
Make	Magna Steyr
Model	DD295
Type	Two speed, permanent four wheel drive transfer box having synchronised shift on the move facility with an actively controlled wet clutch and 50/50 torque split across the centre differential
Clutch type	Wet, multi-plate
Maximum torque capacity	2500 Nm (1842.5 lb.ft)
Ratios:	
• High • Low	• 1:1 • 2.93:1
Maximum shift speeds, Manual Gearbox:	
• High to low ratio • Low to high ratio	• 20 kph (12.4 mph) • 60 kph (37.2 mph)
Maximum shift speeds, Automatic Transmission:	
• High to low ratio • Low to high ratio	• 40 kph (24.8 mph) • 60 kph (37.2 mph)

Torque Specifications

• NOTE: **** New 'Patchlock' Torx bolts must be fitted.**

Description	Nm	lb-ft
Transfer case fluid drain plug	22	16
Transfer case fluid level/filler plug	22	16
Fuel tank heat shield nuts/bolts	10	7
** Rear drive shaft M12 Torx screws	150	111
Rear drive shaft M10 Torx screws	73	54
** Front driveshaft Torx screws		
Stage 1	45	33
Stage 2	Further 90º	Further 90º
Drive shaft centre bearing bolts	30	22
Transmission support insulator	60	44
Wiring harness securing bolts	10	7
Fuel line support bracket bolts	10	7
Transfer case retaining bolts	45	33
Earth cable bolt (2010 Model Year onwards)	15	11

transmissionmanuals.com

Published: 11-May-2011

Transfer Case - Transfer Case

Description and Operation

For additional information, refer to: Four-Wheel Drive Systems (308-07A Four-Wheel Drive Systems, Description and Operation).

transmissionmanuals.com

Published: 11-May-2011

Transfer Case - Transfer Case

Diagnosis and Testing

Principle of Operation

For a detailed description of the transfer case system and operation, refer to the relevant Description and Operation section of the workshop manual. REFER to: Transfer Case (308-07B Transfer Case, Description and Operation).

Inspection and Verification

CAUTION: Diagnosis by substitution from a donor vehicle is **NOT** acceptable. Substitution of control modules does not guarantee confirmation of a fault and may also cause additional faults in the vehicle being checked and/or the donor vehicle.

1. **1.** Verify the customer concern.
2. **2.** Visually inspect for obvious signs of mechanical or electrical damage.

Visual Inspection

Mechanical	Electrical
• Transfer case • Oil leaks • Driveshafts • Halfshafts • Constant velocity (CV) joints	• Fuse(s) • Wiring harness/electrical connectors • Controller area network (CAN) circuits • Instrument cluster • Range change selection switch • Transfer case control module

3. **3.** If an obvious cause for an observed or reported concern is found, correct the cause (if possible) before proceeding to the next step.
4. **4.** If the cause is not visually evident, verify the symptom and refer to the Symptom Chart, alternatively check for Diagnostic Trouble Codes (DTCs) and refer to the DTC Index.

Symptom Chart

Symptom	Message	Possible Causes	Action
Loss of drive due to transfer case stuck in neutral and transmission park lock function is inoperative	'PARK LOCK FAILURE APPLY HANDBRAKE'	• Transfer case control module CAN bus - off bus during range change • Transfer case changeover solenoid fault • Transfer case motor fault • Transfer case internal obstruction	Check for Transfer Case Control Module DTCs and refer to the relevant DTC Index
Loss of drive	-	• Half shaft failure • Driveshaft failure • Front or rear axle: differential failure • Transfer case center differential failure	Check the condition of the driveshafts, half shafts and CV joints, differential
Range change inhibited	'TRANSMISSION RANGE CHANGE INOPERATIVE'	• Transfer case control module has shut down due to thermal overload • Transfer case internal obstruction • Transfer case changeover solenoid fault • Transfer case motor fault • Transfer case control module failure	Check for Transfer Case Control Module DTCs and refer to the relevant DTC Index
Off road traction reduced	'TRANSMISSION OVER HEAT SLOW DOWN'	• Center differential temperature is approaching the over heated threshold	Check for over-temperature DTCs
	'TRANSMISSION FAULT – TRACTION REDUCED'	• Center differential has failed - operating as an open differential • Transfer case control module has stopped transmitting on the CAN bus and defaults to open center differential	Check for lost communication and bus off DTCs

DTC Index

For a list of Diagnostic Trouble Codes (DTCs) that could be logged on this vehicle, please refer to Section 100-00.

transmissionmanuals.com

REFER to: Diagnostic Trouble Code (DTC) Index - DTC: Transfer Case Control Module (TCCM) (100-00 General Information, Description and Operation).

transmissionmanuals.com

Published: 11-May-2011

Transfer Case - Transfer Case Draining and Filling

General Procedures

1. WARNING: Do not work on or under a vehicle supported only by a jack. Always support the vehicle on safety stands.

   Raise and support the vehicle.

2. Position a container to collect the fluid.

3. Remove the fluid drain plug.

   - Clean the immediate area.
   - Remove and discard the sealing washer.

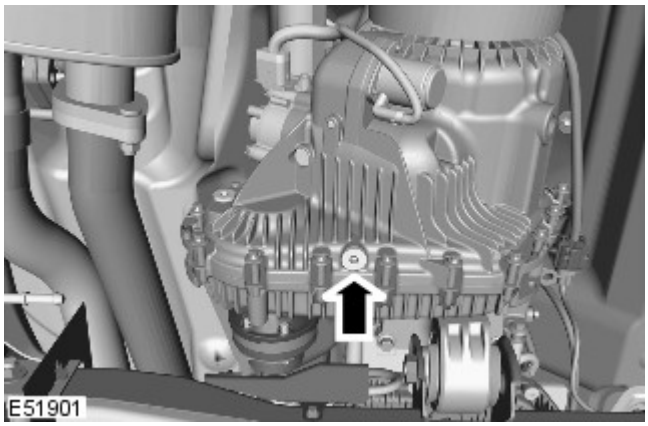

4. Allow the fluid to drain.

5. Install the drain plug and tighten it to 22 Nm (16 lb.ft).

   - Clean the component mating faces.
   - Install a new sealing washer.

6. Remove the fluid filler/level plug.

   - Clean the immediate area.
   - Remove and discard the sealing washer.

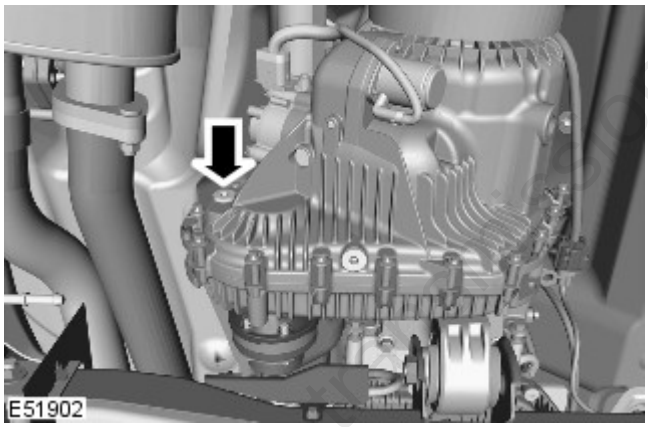

7. Refill transfer case with the recommended fluid, until the fluid is level with bottom of filler/level plug hole.
   For additional information, refer to: Specifications (308-07B Transfer Case, Specifications).

8. Install the fluid filler/level plug and tighten to 22 Nm (16 lb.ft).

   - Clean the component mating faces.
   - Install a new sealing washer.

Published: 11-May-2011

Transfer Case - Transfer Case Input Shaft SealV6 4.0L Petrol

In-vehicle Repair

Special Tool(s)	
303-903  E50940	Oil seal remover 303-903 (LRT-12-092)
308-598  E50941	Oil seal installer 308-598

Removal

1. WARNING: Do not work on or under a vehicle supported only by a jack. Always support the vehicle on safety stands.

Raise and support the vehicle.

2. Remove the transfer case.
For additional information, refer to: Transfer Case - V6 4.0L Petrol (308-07B Transfer Case, Removal).

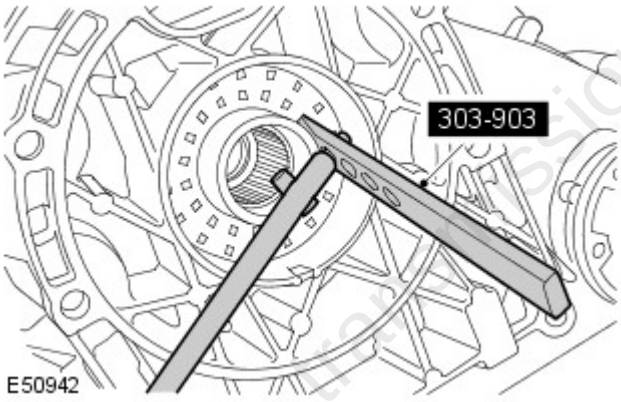

3. CAUTION: Care must be taken to avoid damage to the seal register and running surface.

Carefully remove and discard the oil seal.

- Use the special tool.

Installation

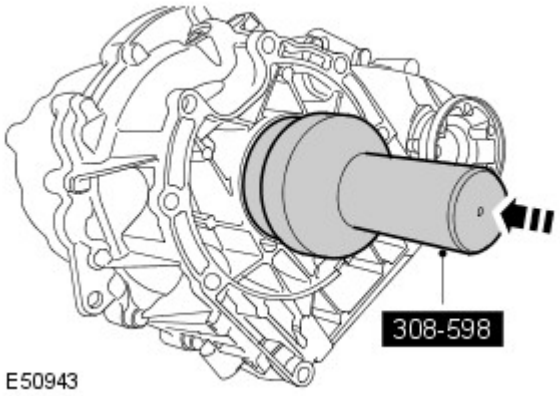

1. CAUTION: Oil seals must be fitted dry.

Install a new seal.

- Clean the seal register.
- Use the special tool.

2. Install the transfer case.
For additional information, refer to: Transfer Case - V6 4.0L

Petrol (308-07B Transfer Case, Removal).

transmissionmanuals.com

Published: 11-May-2011

Transfer Case - Transfer Case Input Shaft SealV8 5.0L Petrol

In-vehicle Repair

Special Tool(s)	
303-903  E50940	Oil seal remover 303-903(LRT-12-092)
308-598  E50941	Oil seal installer 308-598

Removal

1. WARNING: Make sure to support the vehicle with axle stands.

   Raise and support the vehicle.

2. Remove the transfer case.
   For additional information, refer to: Transfer Case - V8 5.0L Petrol (308-07B Transfer Case, Removal).

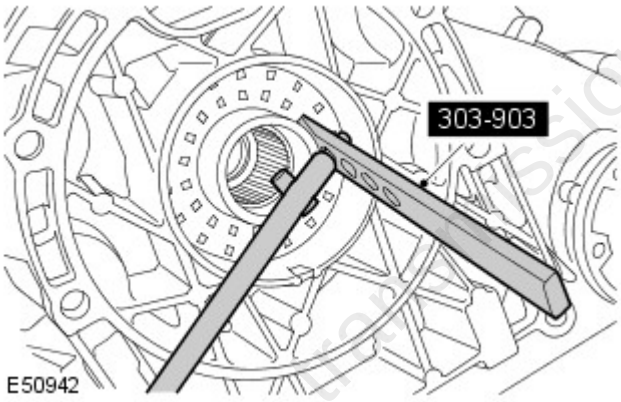

E50942

3. CAUTION: Care must be taken to avoid damage to the seal register and running surface.

   Carefully remove and discard the oil seal.

   - Use the special tool.

Installation

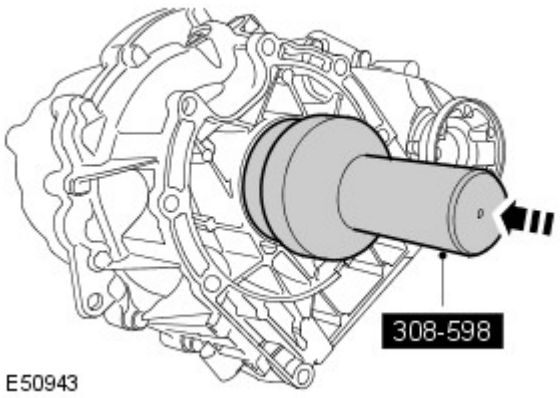

E50943

1. CAUTION: Oil seals must be fitted dry.

   Install a new seal.

   - Clean the seal register.
   - Use the special tool.

2. Install the transfer case.
   For additional information, refer to: Transfer Case - V8 5.0L

Petrol (308-07B Transfer Case, Removal).

transmissionmanuals.com

Published: 11-May-2011

Transfer Case - Transfer Case Input Shaft SealTDV6 2.7L Diesel

In-vehicle Repair

Special Tool(s)	
308-598  E50941	Oil seal installer 308-598
303-903  E50940	Oil seal remover 303-903 (LRT-12-092)

Removal

1. WARNING: Do not work on or under a vehicle supported only by a jack. Always support the vehicle on safety stands.

   Raise and support the vehicle.

2. Remove the transfer case.
   For additional information, refer to: Transfer Case - TDV6 3.0L Diesel (308-07B Transfer Case, Removal).

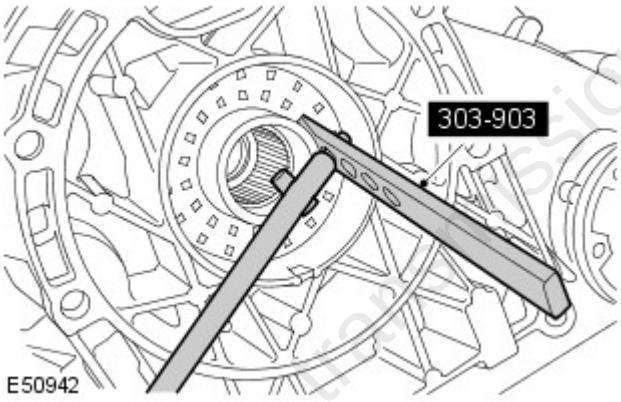

E50942

3. CAUTION: Care must be taken to avoid damage to the seal register and running surface.

   Carefully remove and discard the oil seal.

   - Use the special tool.

Installation

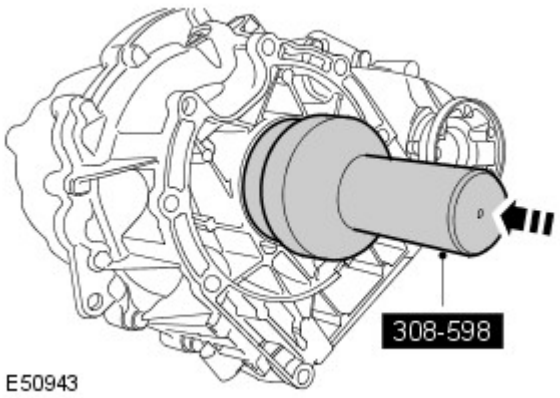

E50943

1. CAUTION: Oil seals must be fitted dry.

   Install a new seal.

   - Clean the seal register.
   - Use the special tool.

2. Install the transfer case.
   For additional information, refer to: Transfer Case - TDV6 3.0L

Diesel (308-07B Transfer Case, Removal).

transmissionmanuals.com

Published: 11-May-2011

Transfer Case - Transfer Case Input Shaft SealTDV6 3.0L Diesel

In-vehicle Repair

Special Tool(s)	
303-903  E50940	Oil seal remover 303-903(LRT-12-092)
308-598  E50941	Oil seal installer 308-598

Removal

1. WARNING: Make sure to support the vehicle with axle stands.

   Raise and support the vehicle.

2. Remove the transfer case.
   For additional information, refer to: Transfer Case - TDV6 3.0L Diesel (308-07B Transfer Case, Removal).

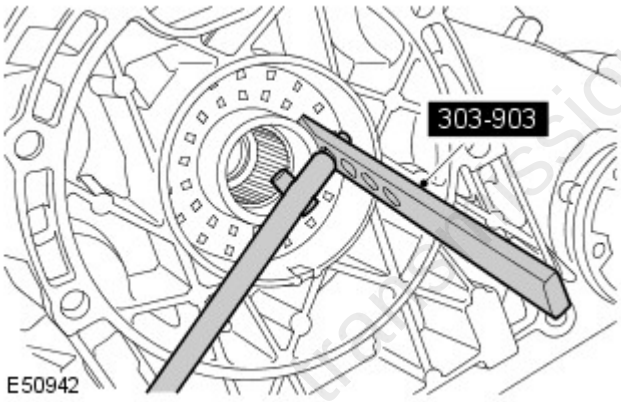

E50942

3. CAUTION: Care must be taken to avoid damage to the seal register and running surface.

   Carefully remove and discard the oil seal.

   - Use the special tool.

Installation

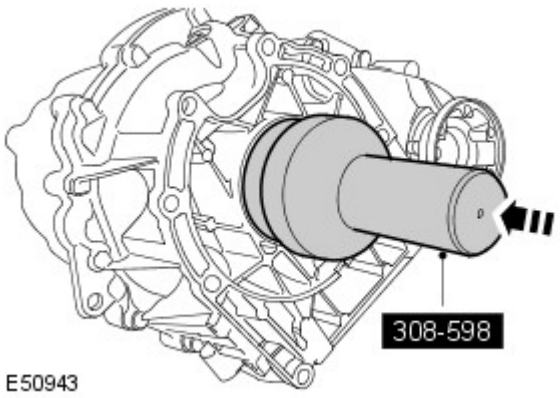

E50943

1. CAUTION: Oil seals must be fitted dry.

   Install a new seal.

   - Clean the seal register.
   - Use the special tool.

2. Install the transfer case.
   For additional information, refer to: Transfer Case - TDV6 3.0L

Diesel (308-07B Transfer Case, Removal).

transmissionmanuals.com

Published: 11-May-2011

Transfer Case - Transfer Case Front Output Shaft SealV6 4.0L Petrol

In-vehicle Repair

Special Tool(s)	
307-486  E62808	Installer (LRT-41-019) 307-486
308-636 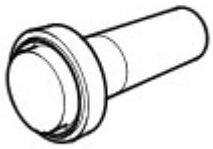 E55702	Installer 308-636
205-818 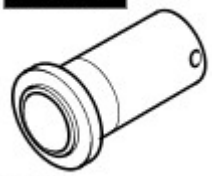 E55429	Installer 205-818

Removal

1. Disconnect the battery ground cable.
For additional information, refer to: Specifications (414-00 Battery and Charging System - General Information, Specifications).

2. WARNING: Do not work on or under a vehicle supported only by a jack. Always support the vehicle on safety stands.

Raise and support the vehicle.

3. Drain the transfer case fluid.
For additional information, refer to: Transfer Case Draining and Filling (308-07B Transfer Case, General Procedures).

4. Remove the transfer case.
For additional information, refer to: Transfer Case - V6 4.0L Petrol (308-07B Transfer Case, Removal).

5. With assistance, secure the transfer case with its transmission mating face down on a flat surface.

- Secure with 2 bolts.

transmissionmanuals.com

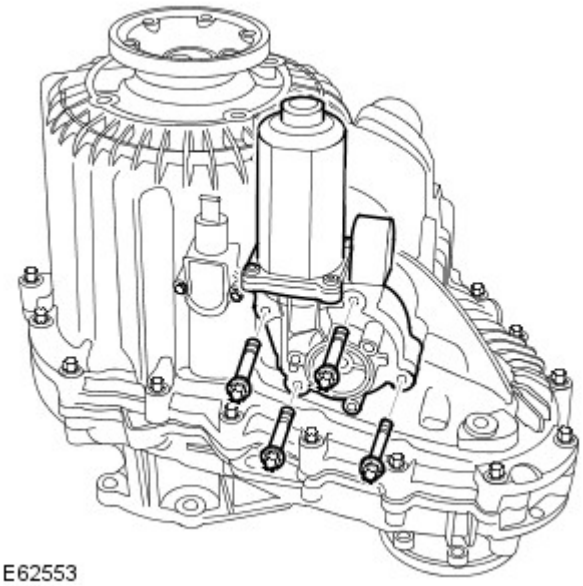

E62553

6. WARNING: Eye protection must be worn.

Remove the shift motor.

- Remove the 4 bolts.
- Remove any debris from the bolt holes.

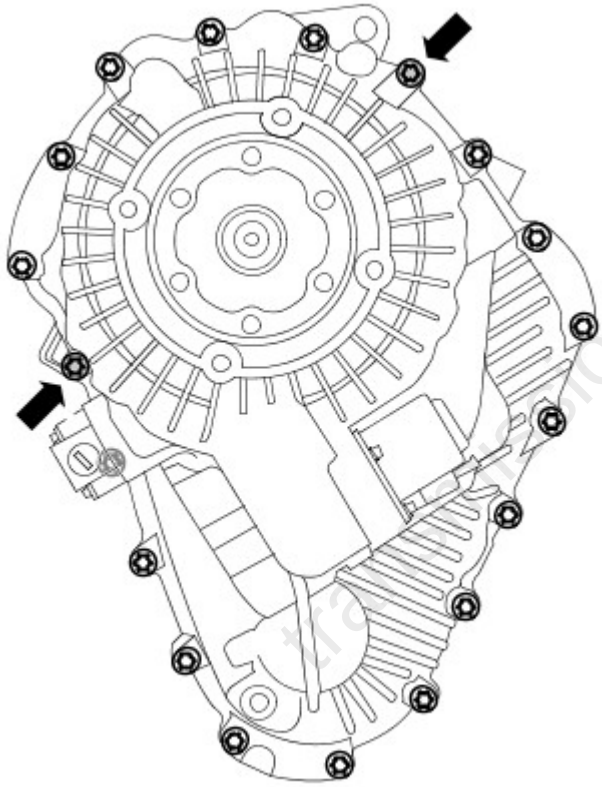

E62554

7. WARNING: Eye protection must be worn.

Remove 17 Torx bolts securing the transfer casings.

- The two bolts indicated remain fully tightened.
- Remove any debris from the bolt holes.

8. With assistance, release the transfer case and secure with the rear face of the transfer case facing down on a flat surface.

transmissionmanuals.com

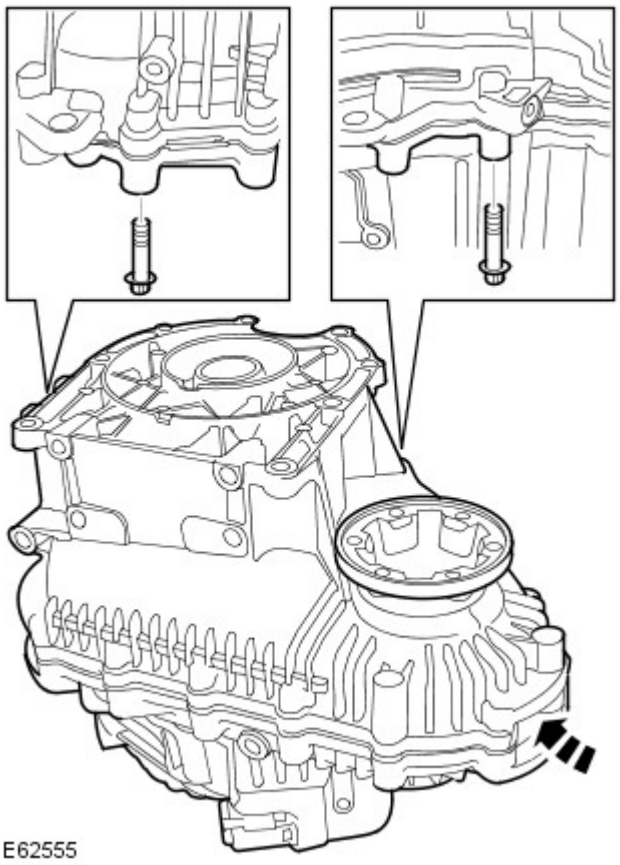

E62555

9. WARNING: Eye protection must be worn.

CAUTION: Care must be taken to avoid damage to the mating surfaces.

Remove the front half of the transfer case.

- Remove the remaining 2 Torx bolts.
- Remove any debris from the bolt holes.
- Use a soft faced mallet.

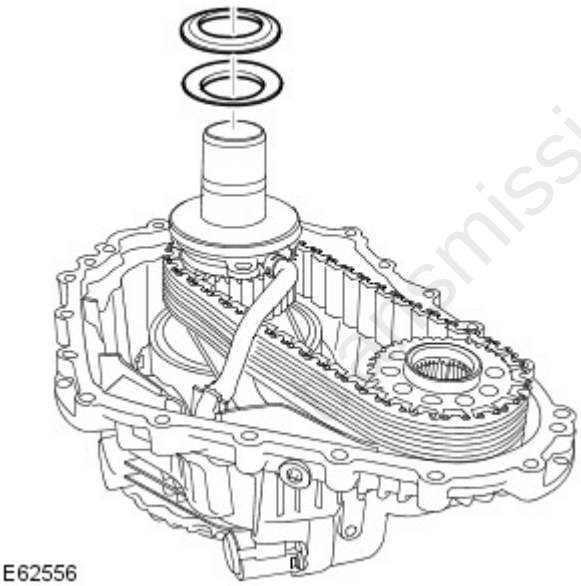

E62556

10. CAUTION: Note the fitted position of the special washers.

Remove the 2 special washers.

transmissionmanuals.com

11. Remove the input shaft and oil pump assembly.

- Release the fluid pump pickup line.

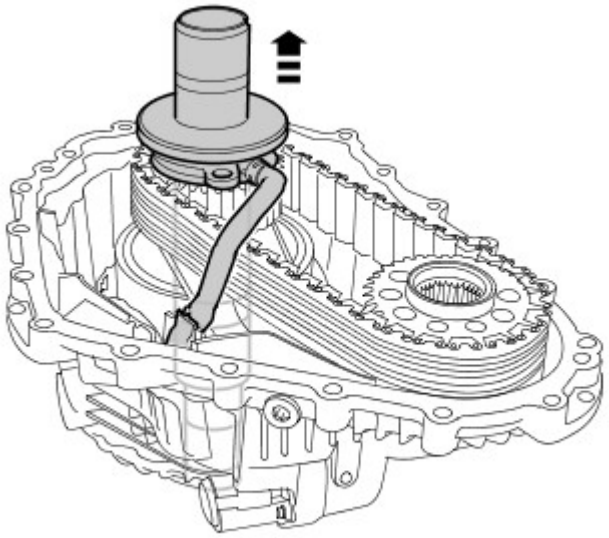

E62557

12. Remove the front output flange.

- Compress the snap ring.
- Press the flange through the bearing.
- Remove and discard the snap ring.

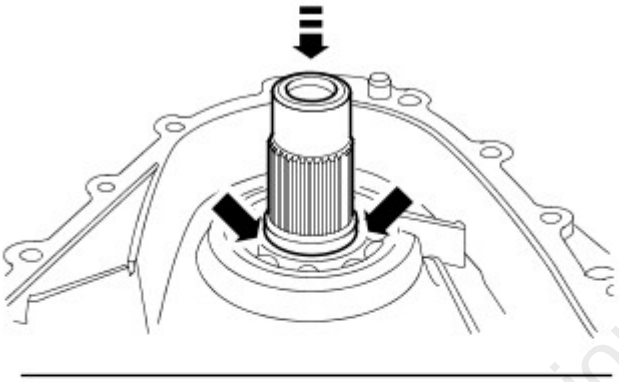

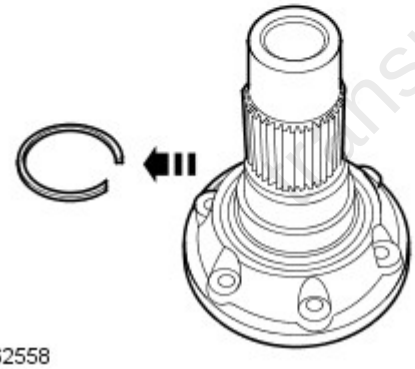

E62558

transmissionmanuals.com

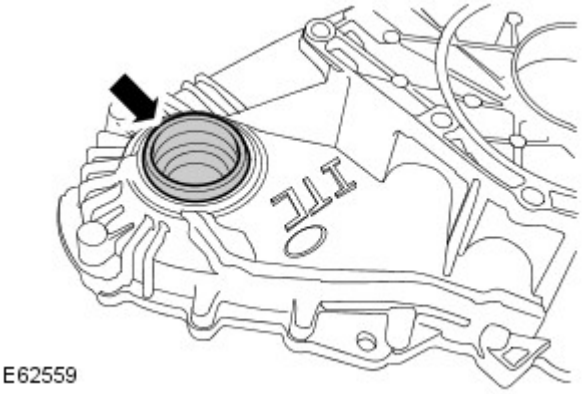

E62559

13. CAUTION: Care must be taken to avoid damage to the seal register and running surface.

Remove the output flange seal.

14. Remove the output flange bearing.

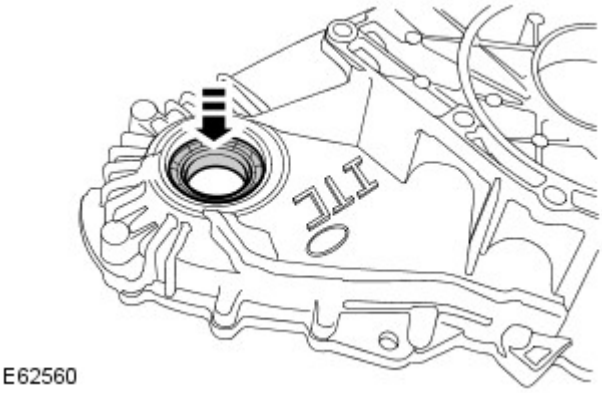

E62560

Installation

1. Remove the sealant from the transfer case mating faces.

2. Clean the magnetic filter.

3. CAUTION: The chamfer on the bearing inner track must face the seal.

Using the special tool, install the output flange bearing.

- Clean the components mating faces.

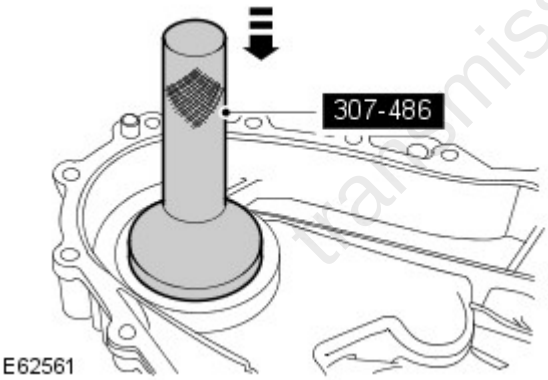

E62561

transmissionmanuals.com

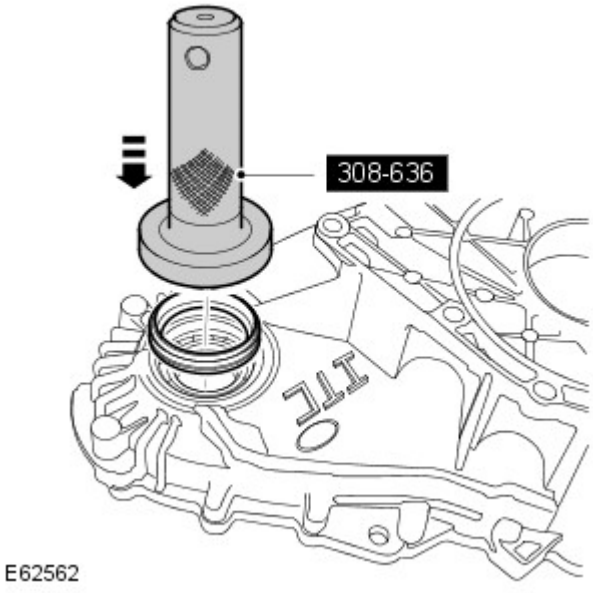

4. Using the special tool, install a new oil seal.

- Clean the component mating faces.
- Grease the new seal.

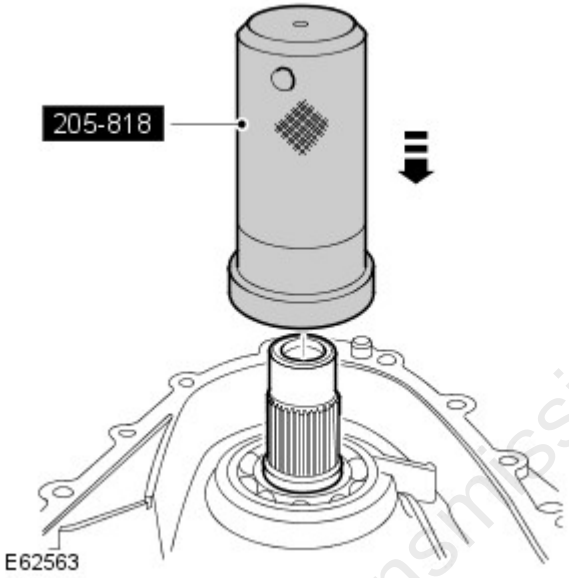

5. CAUTIONS:

⚠ Centralise the snap ring in the snap ring groove before installing the output flange.

⚠ Extreme care is necessary to make sure the snap ring enters the bearing squarely.

Using the special tool and with assistance, install the drive flange.

- Clean the component mating faces.
- Install a new snap ring.
- Make sure the snap ring is fully engaged and retains the drive flange.

6. ⚠ CAUTION: Make sure the washers are installed correctly.

Install the 2 special washers.

- Clean the components.

transmissionmanuals.com

7. CAUTION: Make sure the oil pump is installed over its location peg.

Install the input shaft and oil pump assembly.

- Clean the components.
- Secure the fluid pickup line.

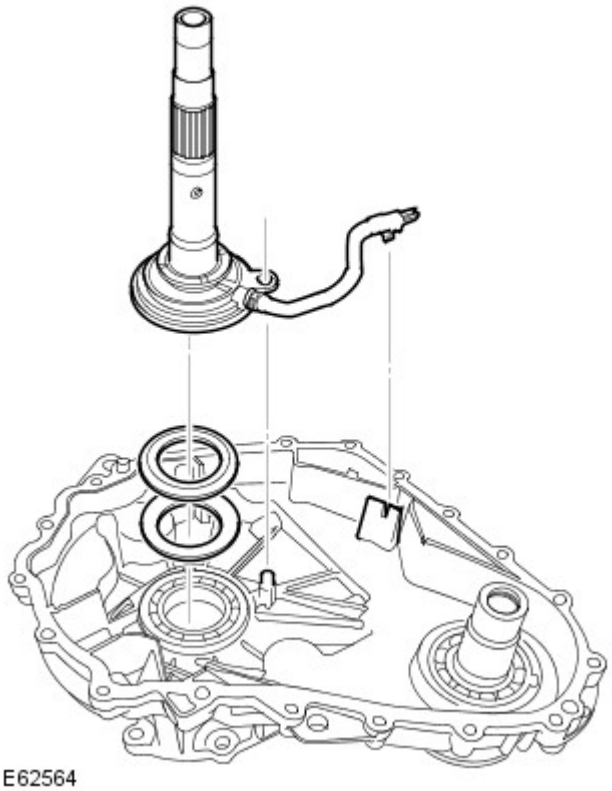

E62564

8. Apply a 2 mm bead of sealant to one surface of the transfer case mating face, as shown.

- Clean the component mating faces.
- Clean the dowels and dowel holes.

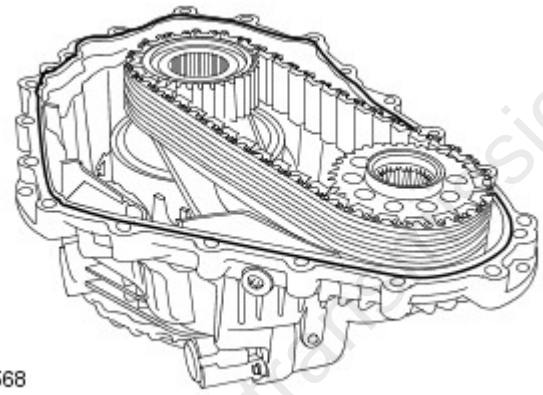

E62568

transmissionmanuals.com

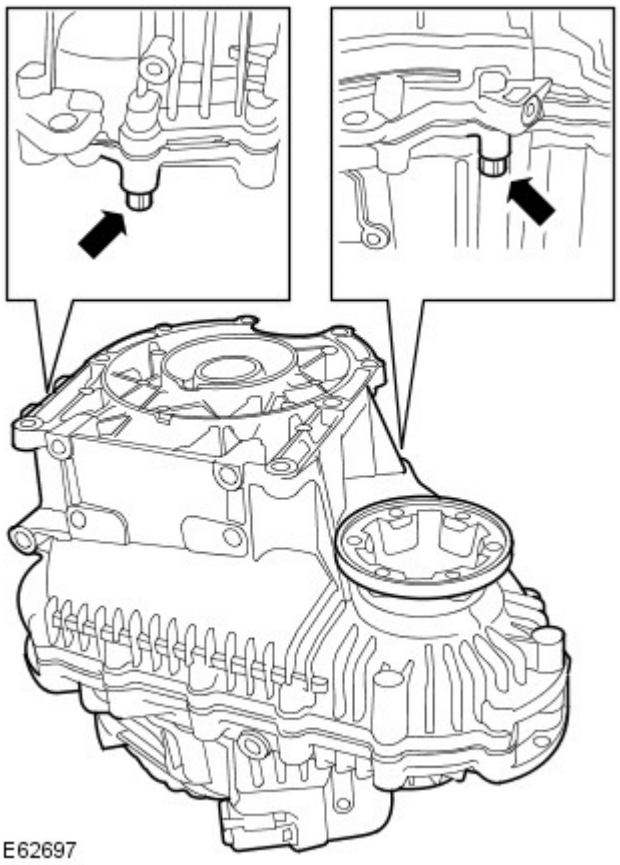

9. Install the front half of the transfer case.

- Evenly tighten the 2 Torx bolts shown to 35 Nm (26 lb.ft).

10. With assistance, release the transfer case and secure with its transmission mating face down on a flat surface.

11. Tighten the remaining Torx bolts to 35 Nm (26 lb.ft).

12. Install the shift motor.

- Clean the components.
- Tighten the Torx bolts to 25 Nm (18 lb.ft).

13. With assistance, release the transfer case.

- Remove the 2 bolts.

14. Install the transfer case.
For additional information, refer to: Transfer Case - V6 4.0L Petrol (308-07B Transfer Case, Removal).

15. Refill the transfer case with the recommended fluid.
For additional information, refer to: Transfer Case Draining and Filling (308-07B Transfer Case, General Procedures).

16. Connect the battery ground cable.
For additional information, refer to: Specifications (414-00 Battery and Charging System - General Information, Specifications).

transmissionmanuals.com

Published: 11-May-2011

Transfer Case - Transfer Case Front Output Shaft SealV8 5.0L Petrol

In-vehicle Repair

Special Tool(s)	
307-486  E62808	Installer 307-486(LRT-41-019)
308-636 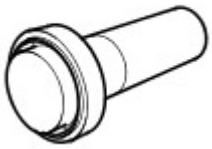 E55702	Installer 308-636
205-818 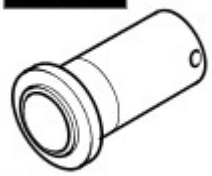 E55429	Installer 205-818

Removal

1. Disconnect the battery ground cable.
   For additional information, refer to: Specifications (414-00 Battery and Charging System - General Information, Specifications).
2. WARNING: Do not work on or under a vehicle supported only by a jack. Always support the vehicle on safety stands.

   Raise and support the vehicle.
3. Drain the transfer case fluid.
   For additional information, refer to: Transfer Case Draining and Filling (308-07B Transfer Case, General Procedures).
4. Remove the transfer case.
   For additional information, refer to: Transfer Case - V8 5.0L Petrol (308-07B Transfer Case, Removal).
5. With assistance, secure the transfer case with its transmission mating face down on a flat surface.
   - Secure with 2 bolts.

transmissionmanuals.com

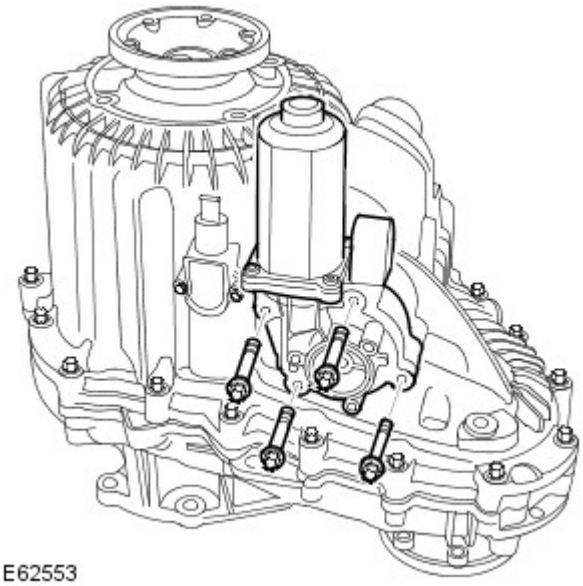

E62553

6. WARNING: Eye protection must be worn.

Remove the shift motor.

- Remove the 4 bolts.
- Remove any debris from the bolt holes.

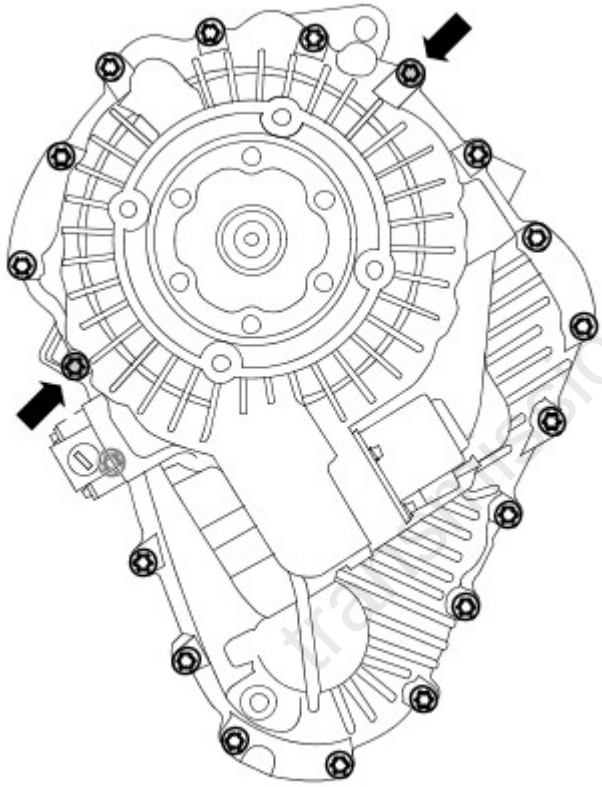

E62554

7. WARNING: Eye protection must be worn.

Remove 17 Torx bolts securing the transfer casings.

- The two bolts indicated remain fully tightened.
- Remove any debris from the bolt holes.

8. With assistance, release the transfer case and secure with the rear face of the transfer case facing down on a flat surface.

transmissionmanuals.com

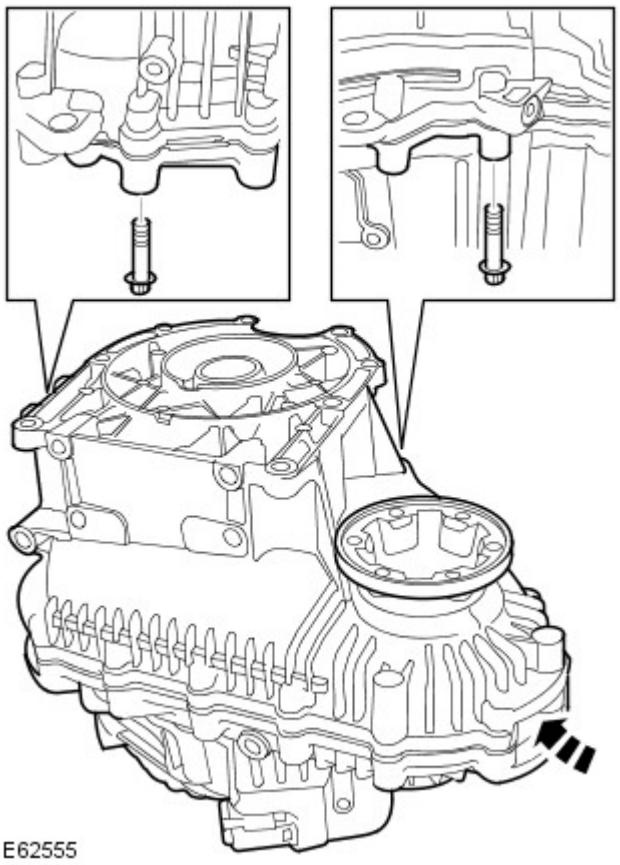

E62555

9. WARNING: Eye protection must be worn.

CAUTION: Care must be taken to avoid damage to the mating surfaces.

Remove the front half of the transfer case.

- Remove the remaining 2 Torx bolts.
- Remove any debris from the bolt holes.
- Use a soft faced mallet.

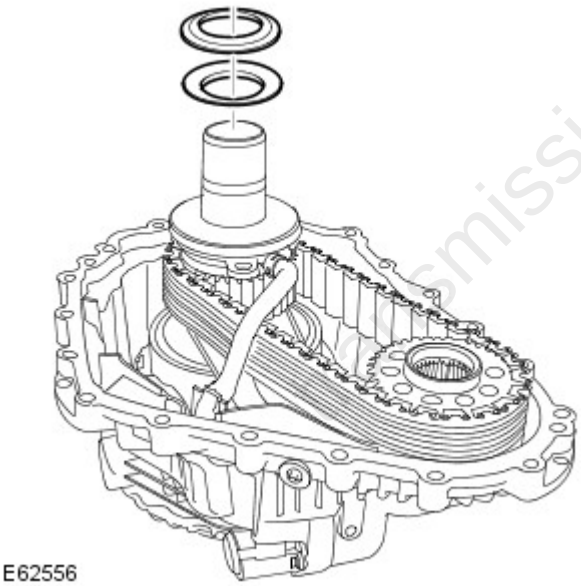

E62556

10. CAUTION: Note the fitted position of the special washers.

Remove the 2 special washers.

transmissionmanuals.com

11. Remove the input shaft and oil pump assembly.

- Release the fluid pump pickup line.

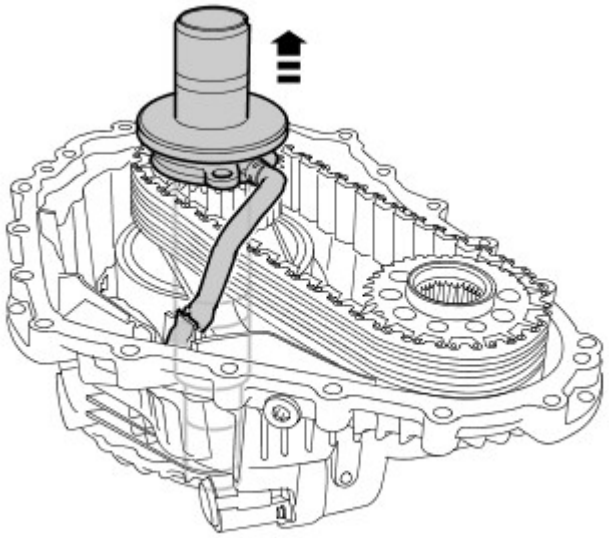

E62557

12. Remove the front output flange.

- Compress the snap ring.
- Press the flange through the bearing.
- Remove and discard the snap ring.

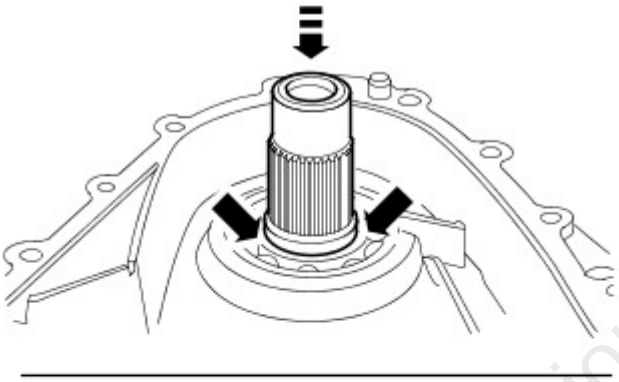

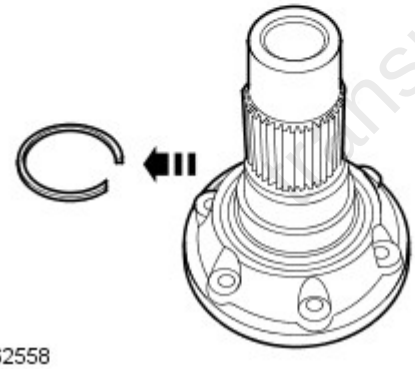

E62558

transmissionmanuals.com

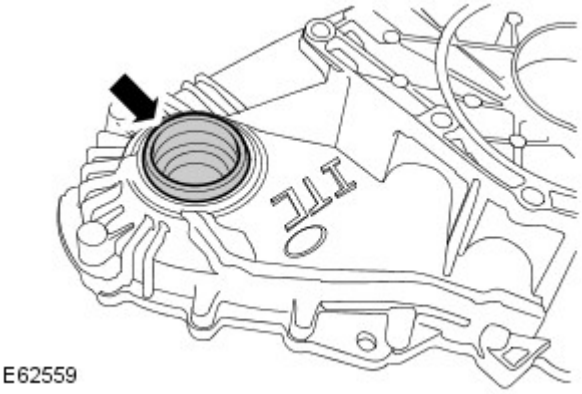

E62559

13. CAUTION: Care must be taken to avoid damage to the seal register and running surface.

Remove the output flange seal.

14. Remove the output flange bearing.

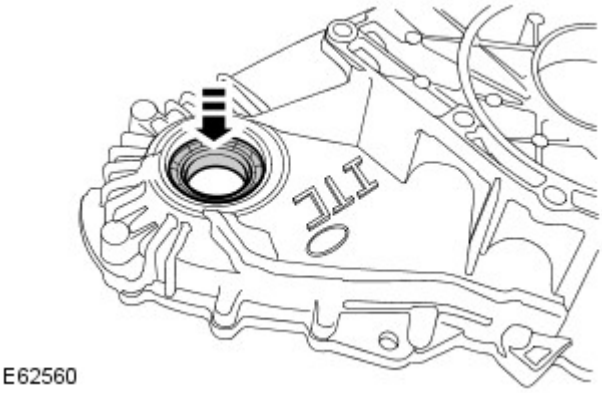

E62560

Installation

1. Remove the sealant from the transfer case mating faces.

2. Clean the magnetic filter.

3. CAUTION: The chamfer on the bearing inner track must face the seal.

Using the special tool, install the output flange bearing.

- Clean the components mating faces.

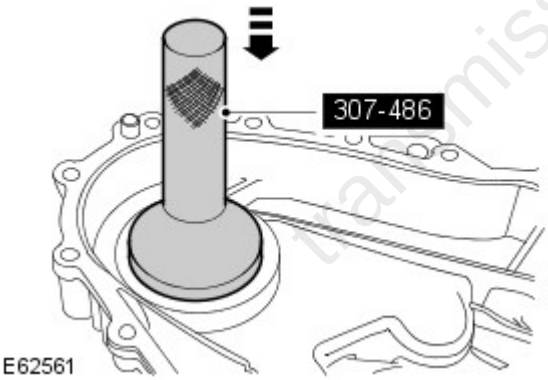

E62561

transmissionmanuals.com

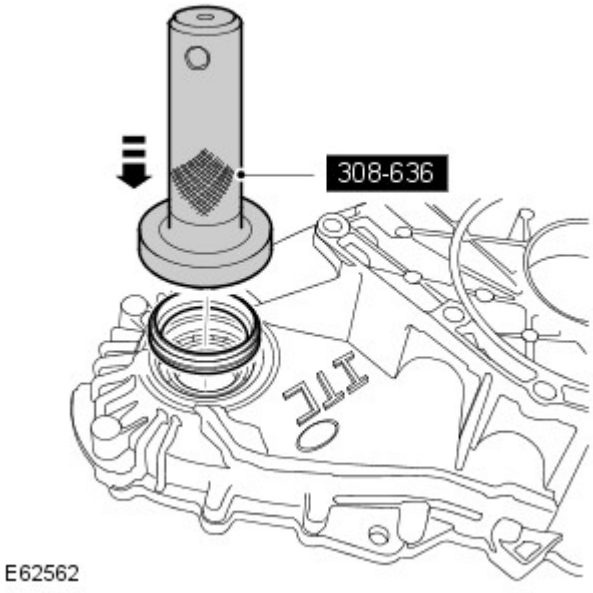

4. Using the special tool, install a new oil seal.

- Clean the component mating faces.
- Grease the new seal.

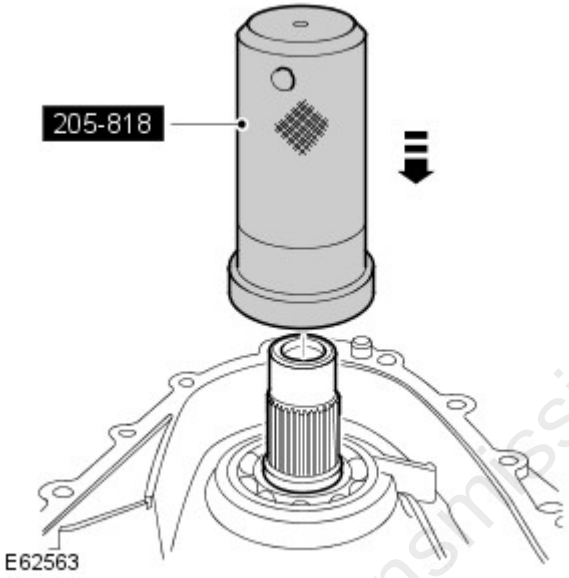

5. CAUTIONS:

⚠ Centralise the snap ring in the snap ring groove before installing the output flange.

⚠ Extreme care is necessary to make sure the snap ring enters the bearing squarely.

Using the special tool and with assistance, install the drive flange.

- Clean the component mating faces.
- Install a new snap ring.
- Make sure the snap ring is fully engaged and retains the drive flange.

6. ⚠ CAUTION: Make sure the washers are installed correctly.

Install the 2 special washers.

- Clean the components.

transmissionmanuals.com

7. CAUTION: Make sure the oil pump is installed over its location peg.

Install the input shaft and oil pump assembly.

- Clean the components.
- Secure the fluid pickup line.

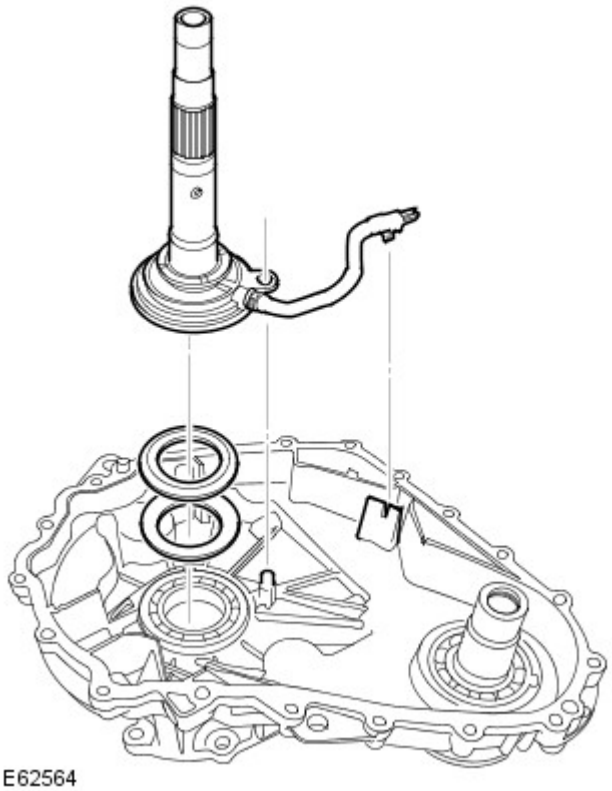

E62564

8. Apply a 2 mm bead of sealant to one surface of the transfer case mating face, as shown.

- Clean the component mating faces.
- Clean the dowels and dowel holes.

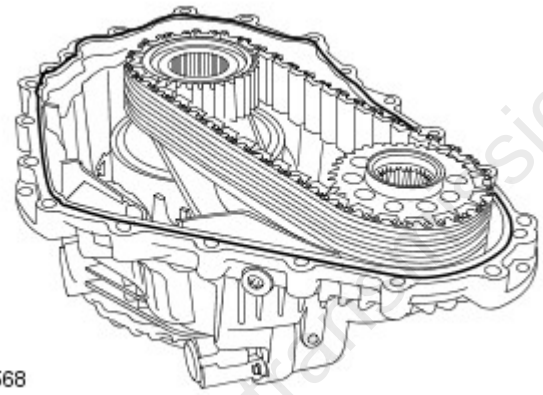

E62568

transmissionmanuals.com

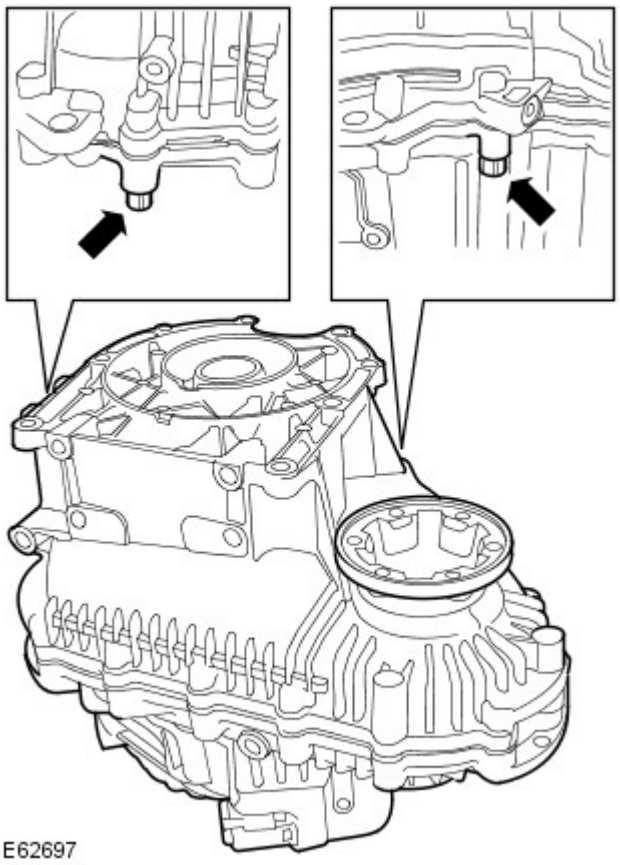

9. Install the front half of the transfer case.

- Evenly tighten the 2 Torx bolts shown to 35 Nm (26 lb.ft).

10. With assistance, release the transfer case and secure with its transmission mating face down on a flat surface.

11. Tighten the remaining Torx bolts to 35 Nm (26 lb.ft).

12. Install the shift motor.

- Clean the components.
- Tighten the Torx bolts to 25 Nm (18 lb.ft).

13. With assistance, release the transfer case.

- Remove the 2 bolts.

14. Install the transfer case.
For additional information, refer to: Transfer Case - V8 5.0L Petrol (308-07B Transfer Case, Removal).

15. Refill the transfer case with the recommended fluid.
For additional information, refer to: Transfer Case Draining and Filling (308-07B Transfer Case, General Procedures).

16. Connect the battery ground cable.
For additional information, refer to: Specifications (414-00 Battery and Charging System - General Information, Specifications).

transmissionmanuals.com

Published: 11-May-2011

Transfer Case - Transfer Case Front Output Shaft SealTDV6 2.7L Diesel

In-vehicle Repair

Special Tool(s)	
307-486  E62808	Installer (LRT-41-019) 307-486
308-636 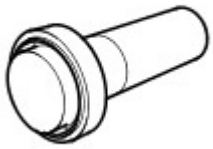 E55702	Installer 308-636
205-818 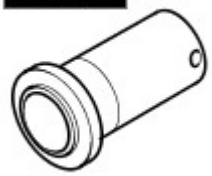 E55429	Installer 205-818

Removal

1. Disconnect the battery ground cable.
   For additional information, refer to: Specifications (414-00 Battery and Charging System - General Information, Specifications).
2. WARNING: Do not work on or under a vehicle supported only by a jack. Always support the vehicle on safety stands.

   Raise and support the vehicle.
3. Drain the transfer case fluid.
   For additional information, refer to: Transfer Case Draining and Filling (308-07B Transfer Case, General Procedures).
4. Remove the transfer case.
   For additional information, refer to: Transfer Case - TDV6 3.0L Diesel (308-07B Transfer Case, Removal).
5. With assistance, secure the transfer case with its transmission mating face down on a flat surface.
   - Secure with 2 bolts.

transmissionmanuals.com

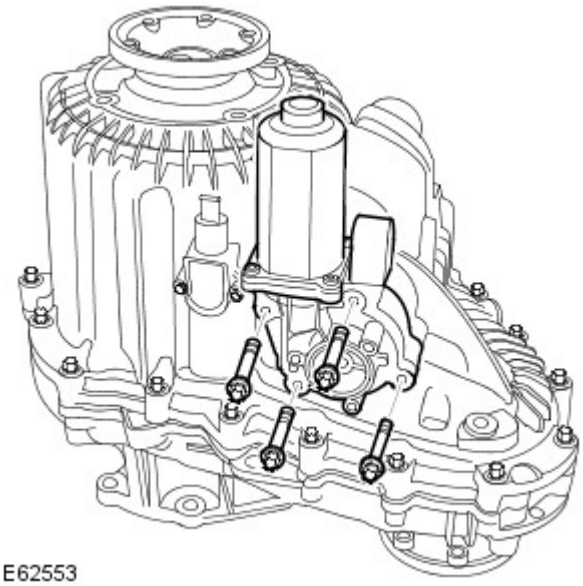

E62553

6. WARNING: Eye protection must be worn.

Remove the shift motor.

- Remove the 4 bolts.
- Remove any debris from the bolt holes.

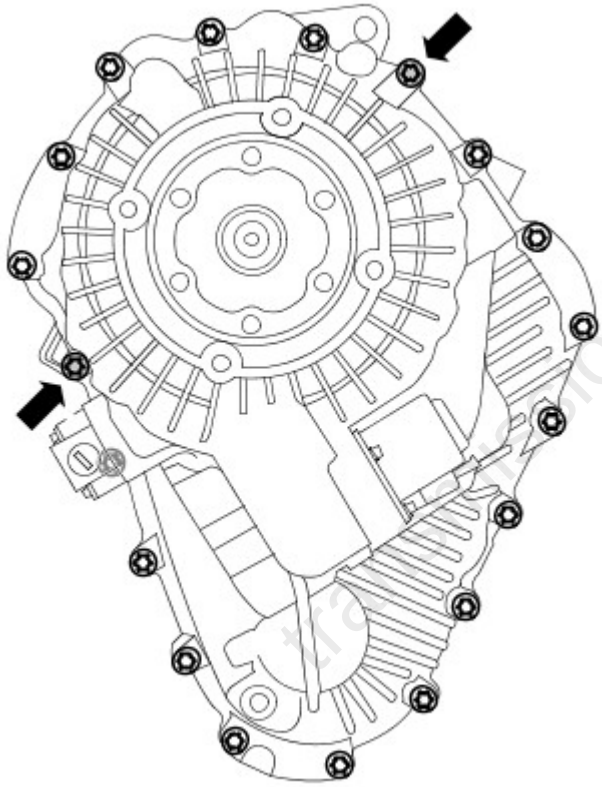

E62554

7. WARNING: Eye protection must be worn.

Remove 17 Torx bolts securing the transfer casings.

- The two bolts indicated remain fully tightened.
- Remove any debris from the bolt holes.

8. With assistance, release the transfer case and secure with the rear face of the transfer case facing down on a flat surface.

transmissionmanuals.com

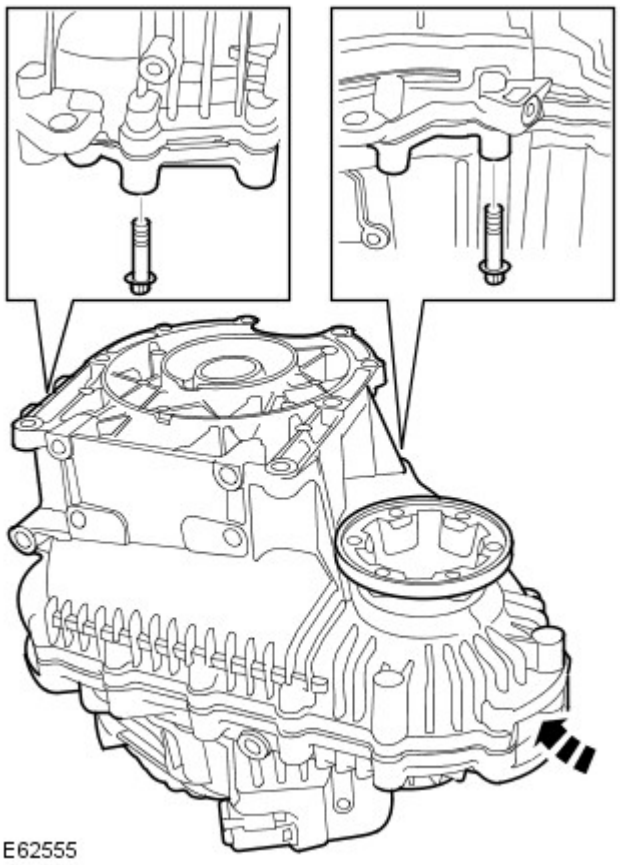

E62555

9. WARNING: Eye protection must be worn.

CAUTION: Care must be taken to avoid damage to the mating surfaces.

Remove the front half of the transfer case.

- Remove the remaining 2 Torx bolts.
- Remove any debris from the bolt holes.
- Use a soft faced mallet.

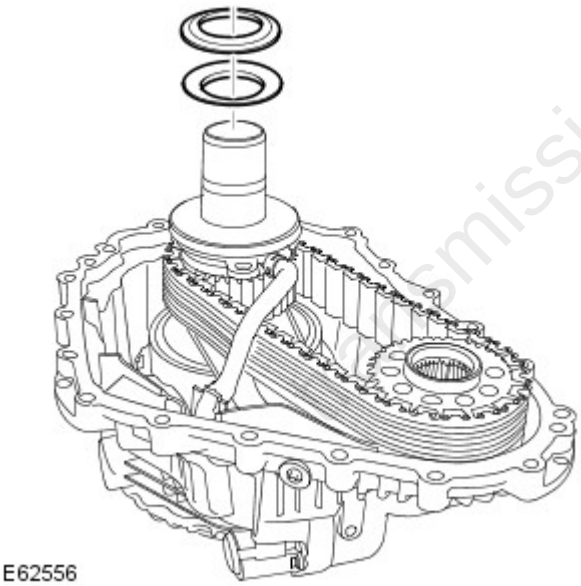

E62556

10. CAUTION: Note the fitted position of the special washers.

Remove the 2 special washers.

transmissionmanuals.com

11. Remove the input shaft and oil pump assembly.

- Release the fluid pump pickup line.

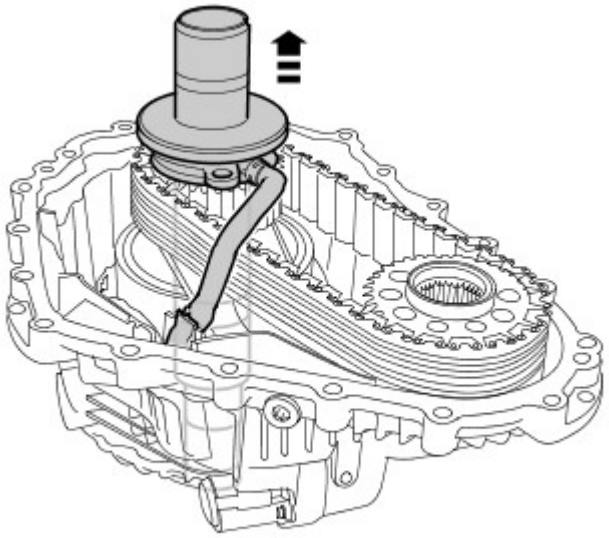

E62557

12. Remove the front output flange.

- Compress the snap ring.
- Press the flange through the bearing.
- Remove and discard the snap ring.

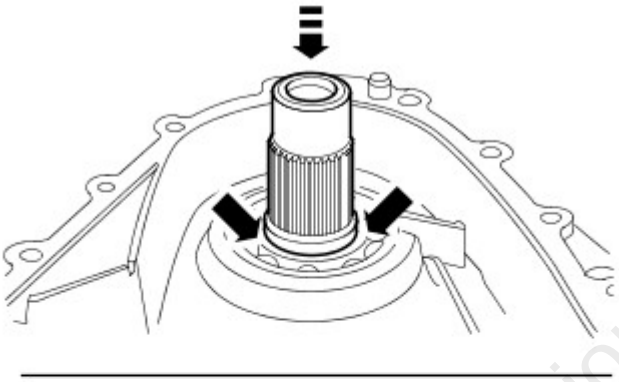

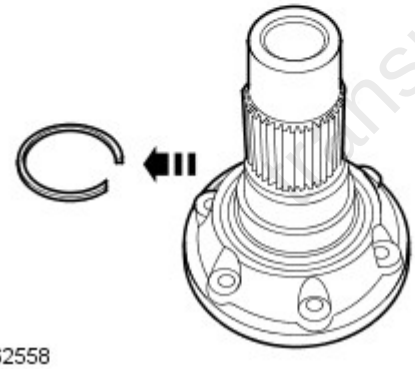

E62558

transmissionmanuals.com

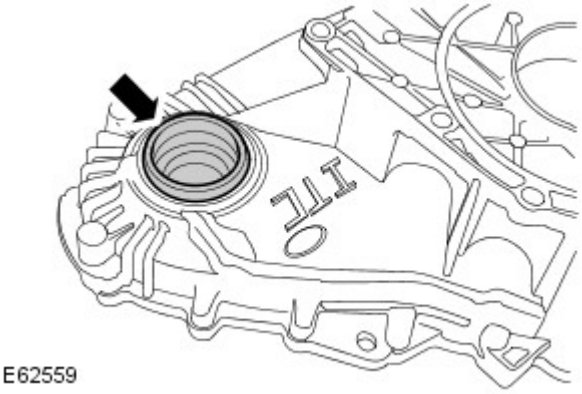

E62559

13. CAUTION: Care must be taken to avoid damage to the seal register and running surface.

Remove the output flange seal.

14. Remove the output flange bearing.

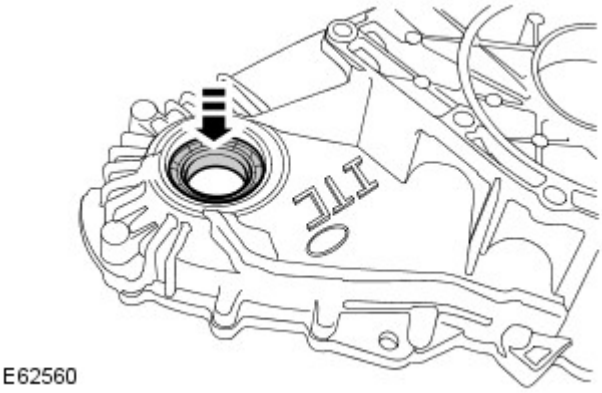

E62560

Installation

1. Remove the sealant from the transfer case mating faces.

2. Clean the magnetic filter.

3. CAUTION: The chamfer on the bearing inner track must face the seal.

Using the special tool, install the output flange bearing.

- Clean the components mating faces.

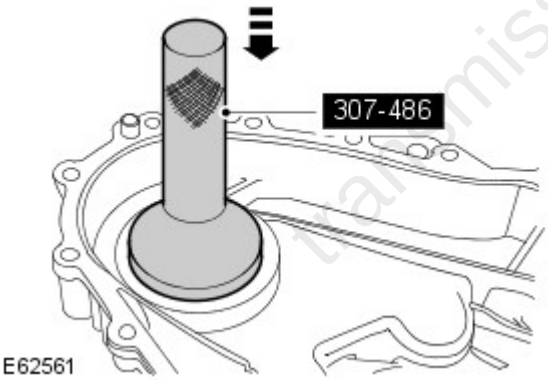

E62561

transmissionmanuals.com

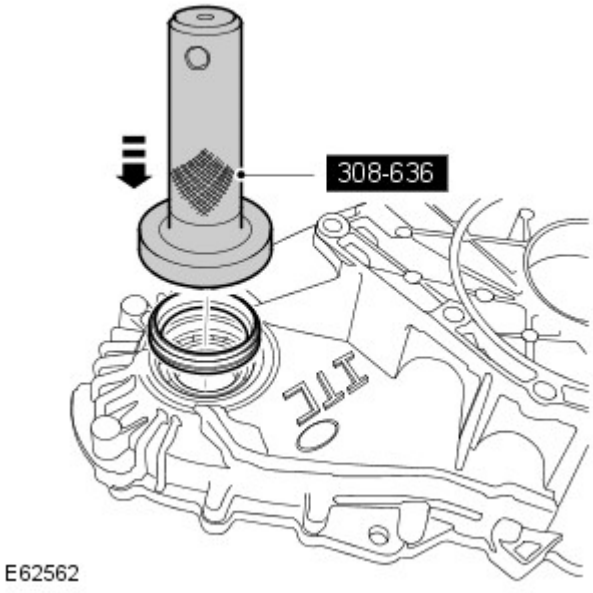

4. Using the special tool, install a new oil seal.

- Clean the component mating faces.
- Grease the new seal.

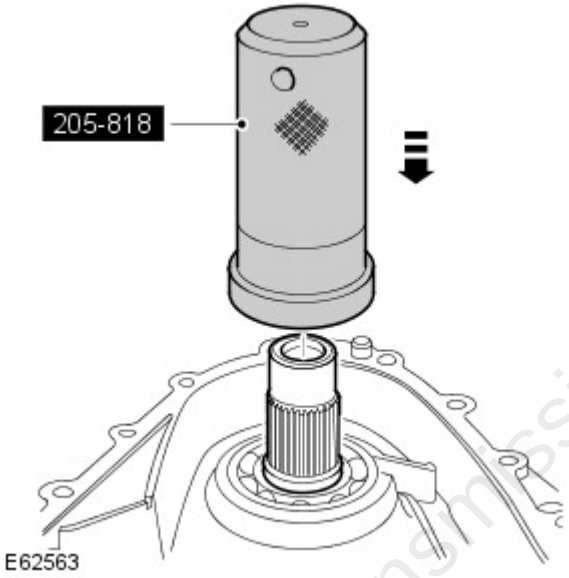

5. CAUTIONS:

⚠ Centralise the snap ring in the snap ring groove before installing the output flange.

⚠ Extreme care is necessary to make sure the snap ring enters the bearing squarely.

Using the special tool and with assistance, install the drive flange.

- Clean the component mating faces.
- Install a new snap ring.
- Make sure the snap ring is fully engaged and retains the drive flange.

6. ⚠ CAUTION: Make sure the washers are installed correctly.

Install the 2 special washers.

- Clean the components.

transmissionmanuals.com

7. CAUTION: Make sure the oil pump is installed over its location peg.

Install the input shaft and oil pump assembly.

- Clean the components.
- Secure the fluid pickup line.

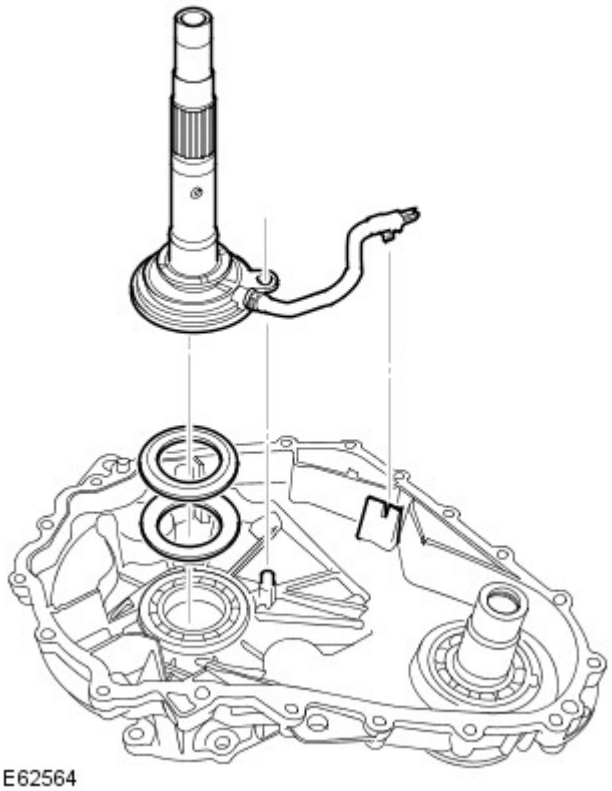

E62564

8. Apply a 2 mm bead of sealant to one surface of the transfer case mating face, as shown.

- Clean the component mating faces.
- Clean the dowels and dowel holes.

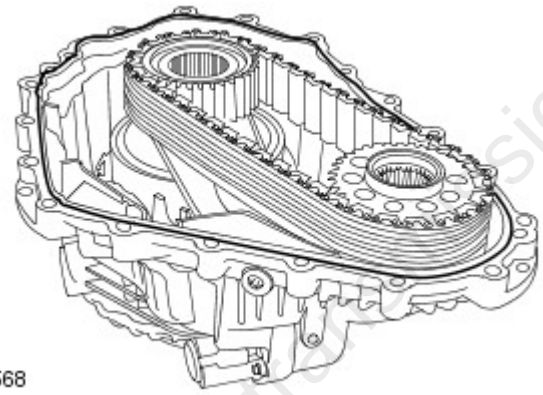

E62568

transmissionmanuals.com

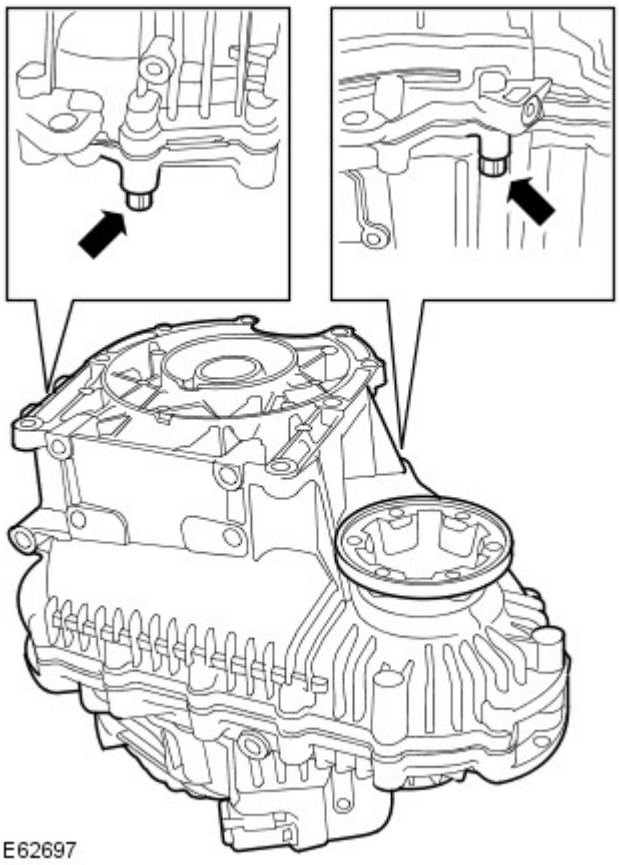

9. Install the front half of the transfer case.

- Evenly tighten the 2 Torx bolts shown to 35 Nm (26 lb.ft).

10. With assistance, release the transfer case and secure with its transmission mating face down on a flat surface.

11. Tighten the remaining Torx bolts to 35 Nm (26 lb.ft).

12. Install the shift motor.

- Clean the components.
- Tighten the Torx bolts to 25 Nm (18 lb.ft).

13. With assistance, release the transfer case.

- Remove the 2 bolts.

14. Install the transfer case.
For additional information, refer to: Transfer Case - TDV6 3.0L Diesel (308-07B Transfer Case, Removal).

15. Refill the transfer case with the recommended fluid.
For additional information, refer to: Transfer Case Draining and Filling (308-07B Transfer Case, General Procedures).

16. Connect the battery ground cable.
For additional information, refer to: Specifications (414-00 Battery and Charging System - General Information, Specifications).

transmissionmanuals.com

Published: 11-May-2011

Transfer Case - Transfer Case Front Output Shaft SealTDV6 3.0L Diesel

In-vehicle Repair

Special Tool(s)	
307-486  E62808	Installer 307-486(LRT-41-019)
308-636 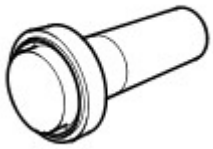 E55702	Installer 308-636
205-818 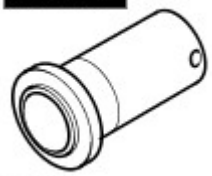 E55429	Installer 205-818

Removal

1. Disconnect the battery ground cable.
   For additional information, refer to: Specifications (414-00 Battery and Charging System - General Information, Specifications).
2. WARNING: Do not work on or under a vehicle supported only by a jack. Always support the vehicle on safety stands.

   Raise and support the vehicle.
3. Drain the transfer case fluid.
   For additional information, refer to: Transfer Case Draining and Filling (308-07B Transfer Case, General Procedures).
4. Remove the transfer case.
   For additional information, refer to: Transfer Case - TDV6 3.0L Diesel (308-07B Transfer Case, Removal).
5. With assistance, secure the transfer case with its transmission mating face down on a flat surface.
   - Secure with 2 bolts.

transmissionmanuals.com

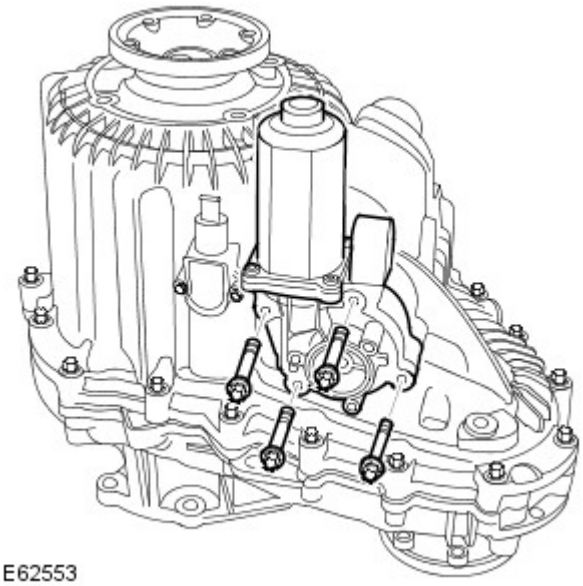

E62553

6. WARNING: Eye protection must be worn.

Remove the shift motor.

- Remove the 4 bolts.
- Remove any debris from the bolt holes.

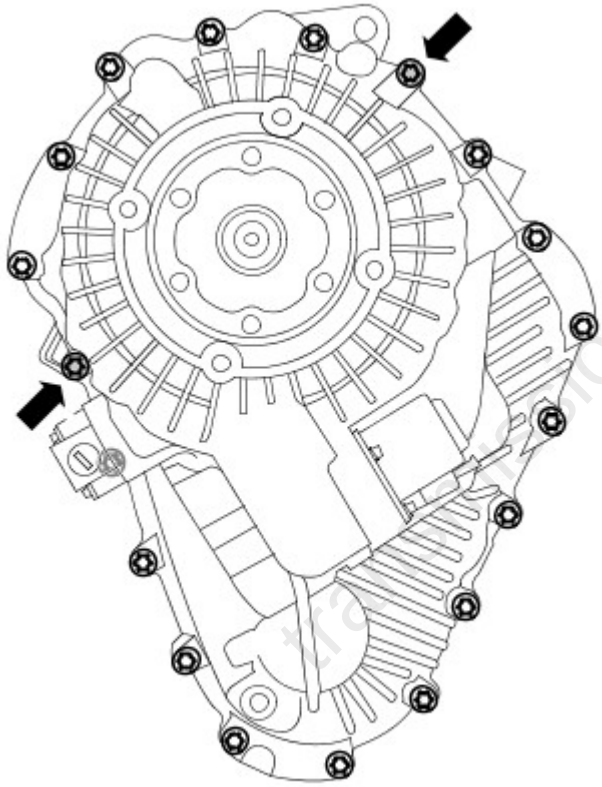

E62554

7. WARNING: Eye protection must be worn.

Remove 17 Torx bolts securing the transfer casings.

- The two bolts indicated remain fully tightened.
- Remove any debris from the bolt holes.

8. With assistance, release the transfer case and secure with the rear face of the transfer case facing down on a flat surface.

transmissionmanuals.com

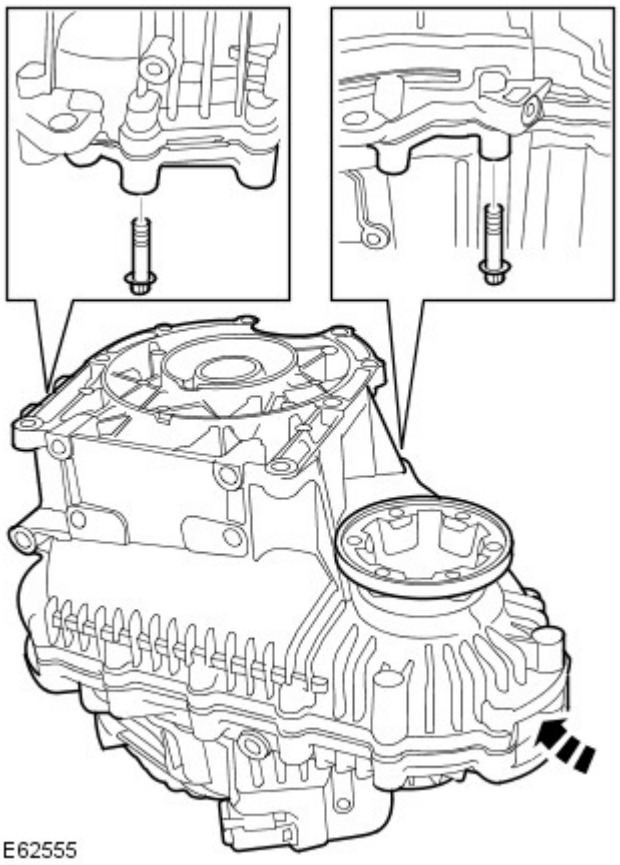

E62555

9. WARNING: Eye protection must be worn.

CAUTION: Care must be taken to avoid damage to the mating surfaces.

Remove the front half of the transfer case.

- Remove the remaining 2 Torx bolts.
- Remove any debris from the bolt holes.
- Use a soft faced mallet.

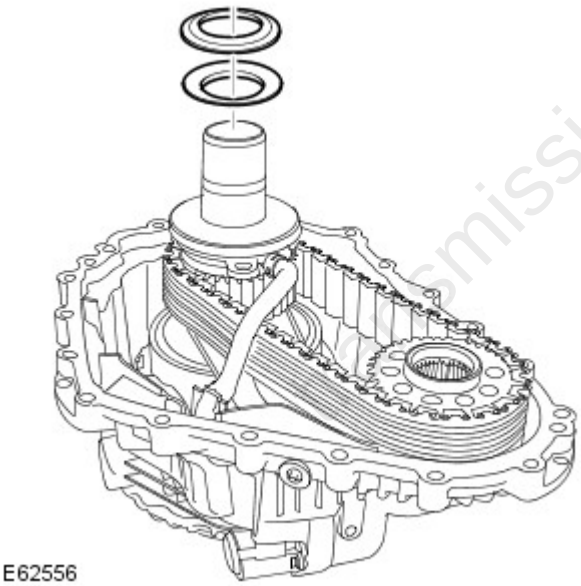

E62556

10. CAUTION: Note the fitted position of the special washers.

Remove the 2 special washers.

transmissionmanuals.com

11. Remove the input shaft and oil pump assembly.

- Release the fluid pump pickup line.

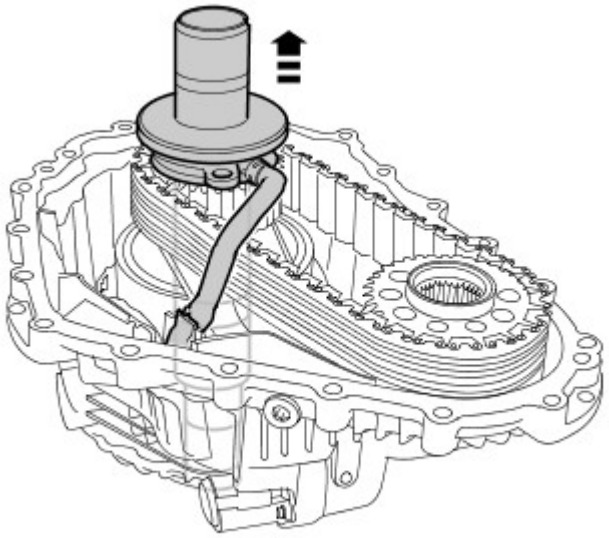

E62557

12. Remove the front output flange.

- Compress the snap ring.
- Press the flange through the bearing.
- Remove and discard the snap ring.

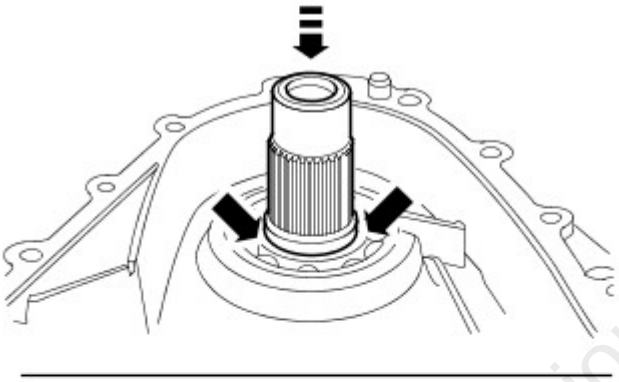

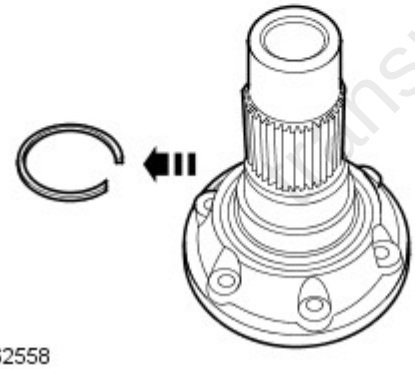

E62558

transmissionmanuals.com

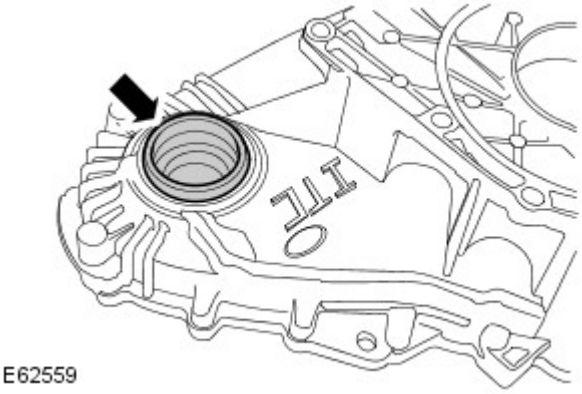

E62559

13. CAUTION: Care must be taken to avoid damage to the seal register and running surface.

Remove the output flange seal.

14. Remove the output flange bearing.

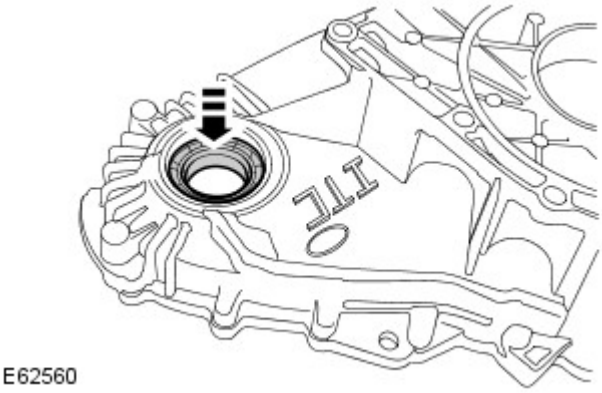

E62560

Installation

1. Remove the sealant from the transfer case mating faces.

2. Clean the magnetic filter.

3. CAUTION: The chamfer on the bearing inner track must face the seal.

Using the special tool, install the output flange bearing.

- Clean the components mating faces.

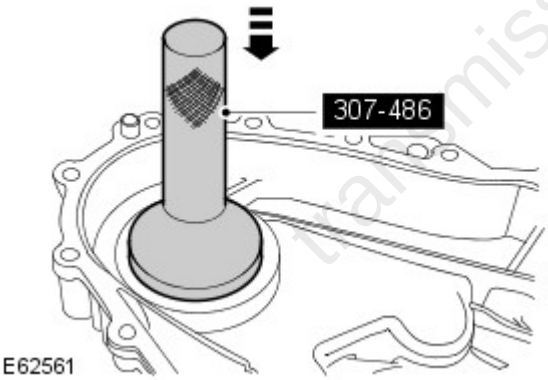

E62561

transmissionmanuals.com

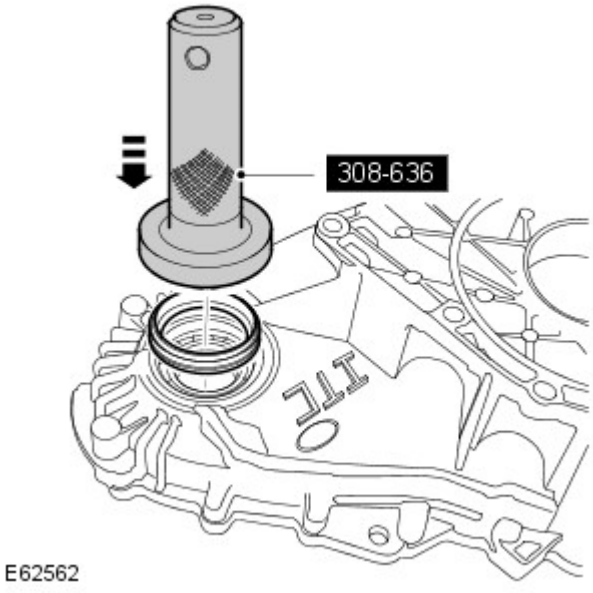

4. Using the special tool, install a new oil seal.

- Clean the component mating faces.
- Grease the new seal.

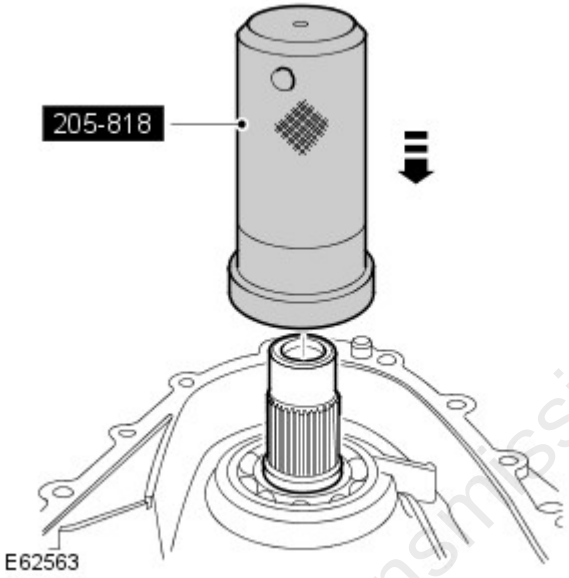

5. CAUTIONS:

⚠ Centralise the snap ring in the snap ring groove before installing the output flange.

⚠ Extreme care is necessary to make sure the snap ring enters the bearing squarely.

Using the special tool and with assistance, install the drive flange.

- Clean the component mating faces.
- Install a new snap ring.
- Make sure the snap ring is fully engaged and retains the drive flange.

6. ⚠ CAUTION: Make sure the washers are installed correctly.

Install the 2 special washers.

- Clean the components.

transmissionmanuals.com

7. CAUTION: Make sure the oil pump is installed over its location peg.

Install the input shaft and oil pump assembly.

- Clean the components.
- Secure the fluid pickup line.

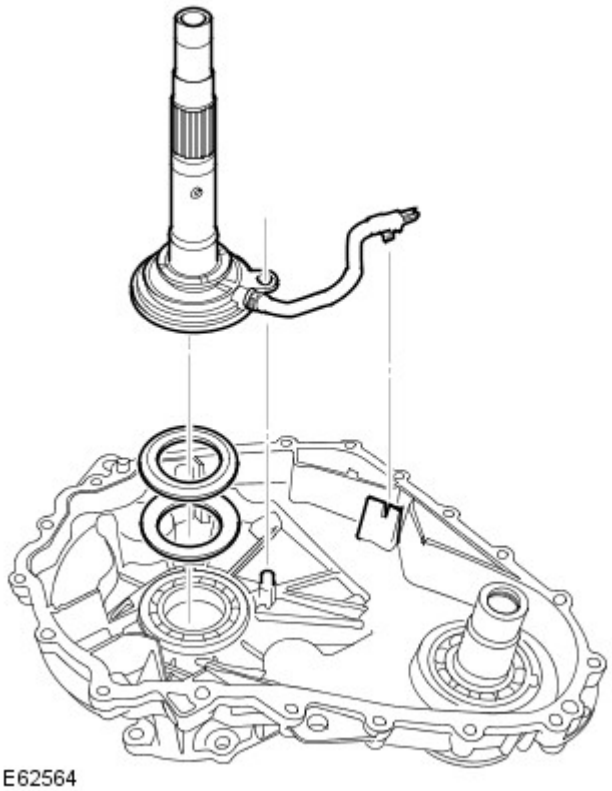

E62564

8. Apply a 2 mm bead of sealant to one surface of the transfer case mating face, as shown.

- Clean the component mating faces.
- Clean the dowels and dowel holes.

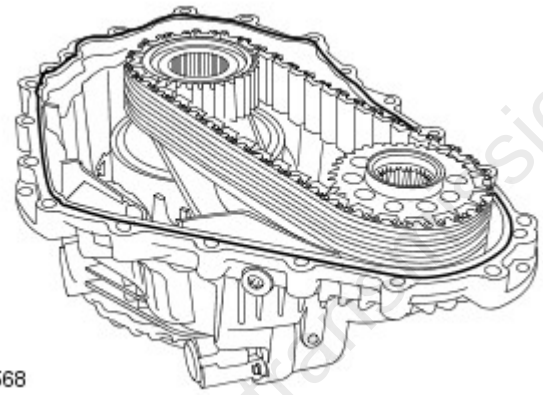

E62568

transmissionmanuals.com

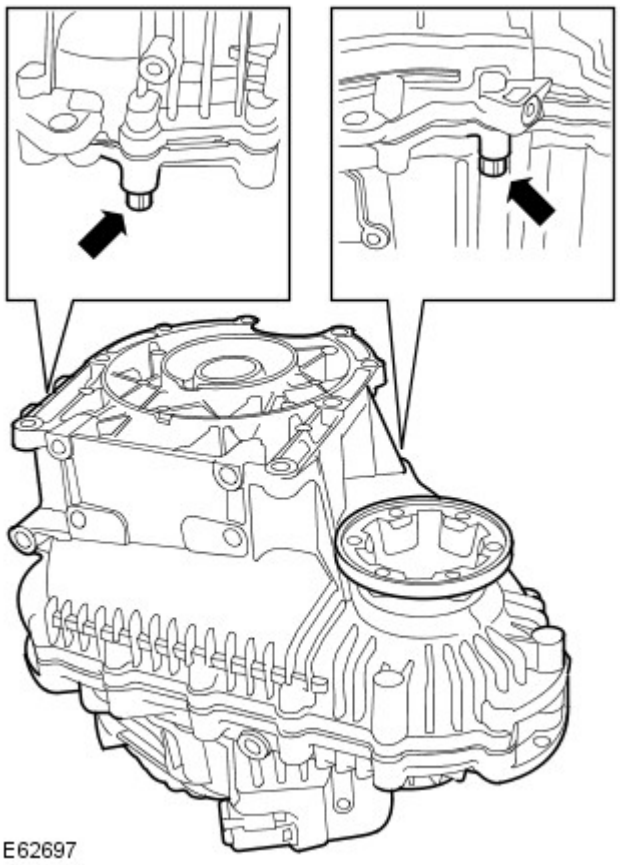

9. Install the front half of the transfer case.

- Evenly tighten the 2 Torx bolts shown to 35 Nm (26 lb.ft).

10. With assistance, release the transfer case and secure with its transmission mating face down on a flat surface.

11. Tighten the remaining Torx bolts to 35 Nm (26 lb.ft).

12. Install the shift motor.

- Clean the components.
- Tighten the Torx bolts to 25 Nm (18 lb.ft).

13. With assistance, release the transfer case.

- Remove the 2 bolts.

14. Install the transfer case.
For additional information, refer to: Transfer Case - TDV6 3.0L Diesel (308-07B Transfer Case, Removal).

15. Refill the transfer case with the recommended fluid.
For additional information, refer to: Transfer Case Draining and Filling (308-07B Transfer Case, General Procedures).

16. Connect the battery ground cable.
For additional information, refer to: Specifications (414-00 Battery and Charging System - General Information, Specifications).

transmissionmanuals.com

Published: 11-May-2011

Transfer Case - Transfer Case Rear Output Shaft SealV6 4.0L Petrol

In-vehicle Repair

Special Tool(s)	
	Remover/installer (LRT-54-015) 205-726
	Seal installer 308-637
	Installer 204-525/1

Removal

1. Disconnect the battery ground cable.
For additional information, refer to: Specifications (414-00 Battery and Charging System - General Information, Specifications).

2. WARNING: Do not work on or under a vehicle supported only by a jack. Always support the vehicle on safety stands.

Raise and support the vehicle.

3. Drain the transfer case fluid.
For additional information, refer to: Transfer Case Draining and Filling (308-07B Transfer Case, General Procedures).

4. Remove the transfer case.
For additional information, refer to: Transfer Case - V6 4.0L Petrol (308-07B Transfer Case, Removal).

5. With assistance, secure the transfer case with its transmission mating face down on a flat surface.

- Secure with 2 bolts.

transmissionmanuals.com

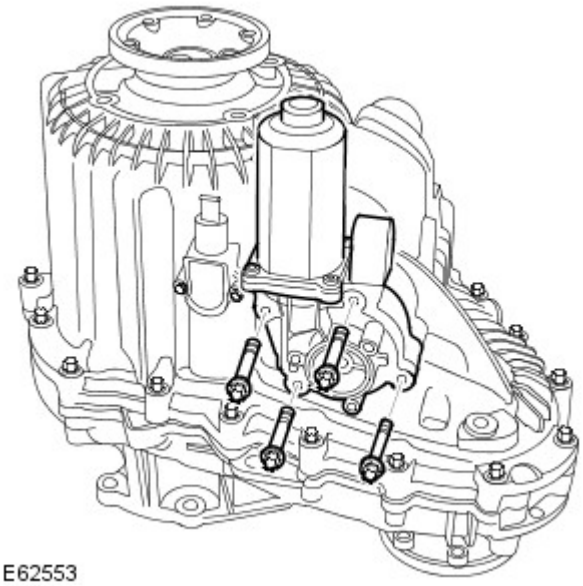

E62553

6. WARNING: Eye protection must be worn.

Remove the shift motor.

- Remove the 4 bolts.
- Remove any debris from the bolt holes.

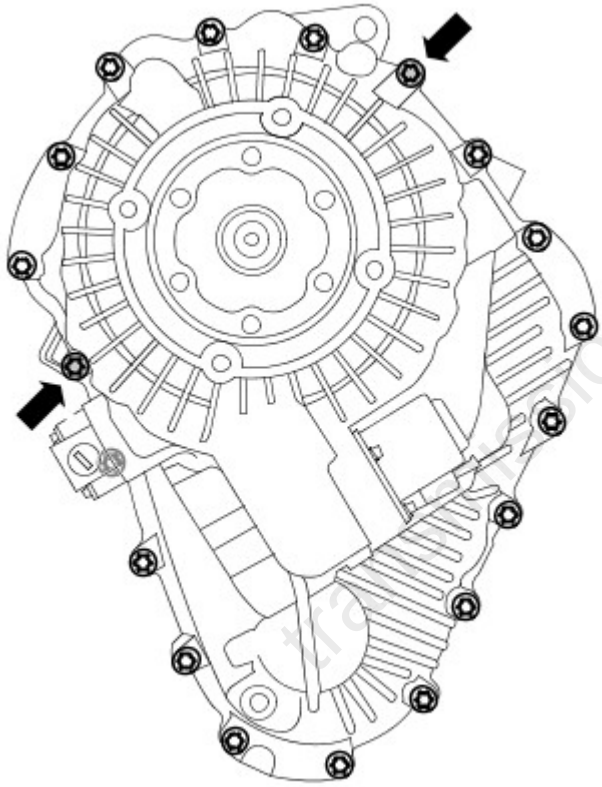

E62554

7. WARNING: Eye protection must be worn.

Remove 17 Torx bolts securing the transfer casings.

- The two bolts indicated remain fully tightened.
- Remove any debris from the bolt holes.

transmissionmanuals.com

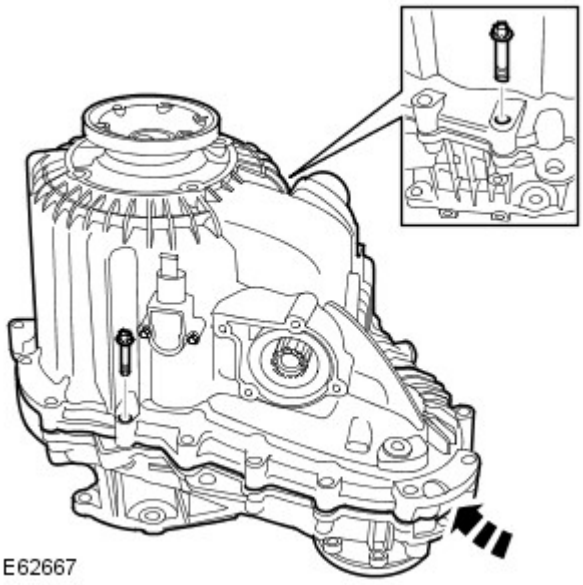
E62667

8. WARNING: Eye protection must be worn.

CAUTION: Care must be taken to avoid damage to the mating surfaces.

Remove the rear half of the transfer case.

- Remove the remaining 2 Torx bolts.
- Remove any debris from the bolt holes.
- Use a soft faced mallet.

9. Remove the differential module.

- Remove the spacer.

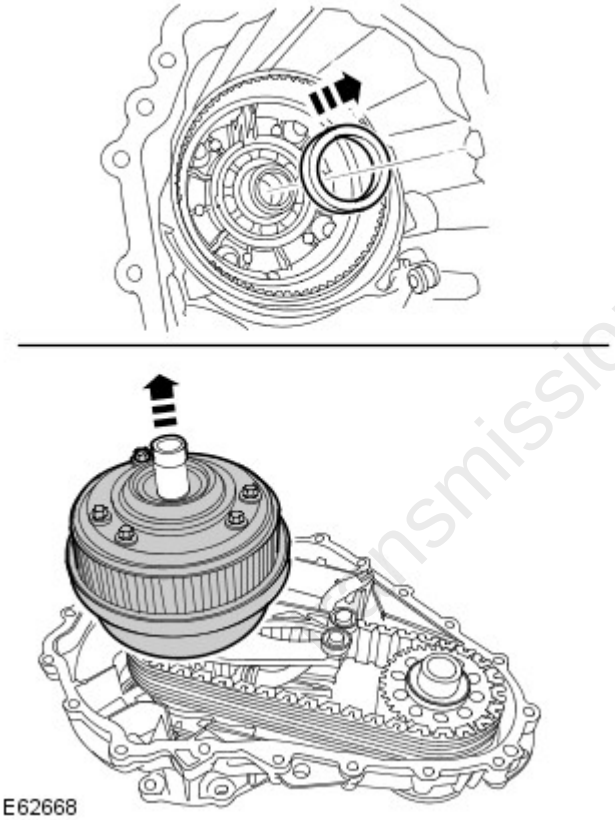
E62668

transmissionmanuals.com

10. NOTE: Remove as an assembly.

Remove the clutch, chain and sprocket.

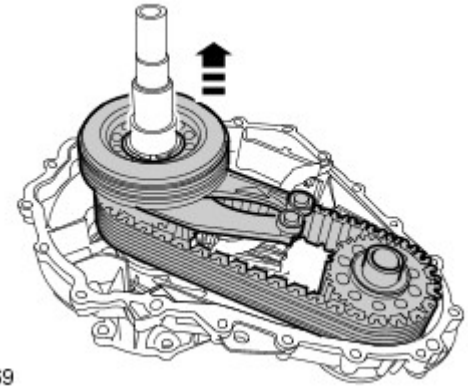

E62669

11. Remove the rear output flange.

- Compress the snap ring.
- Press the flange through the bearing.
- Remove and discard the snap ring.

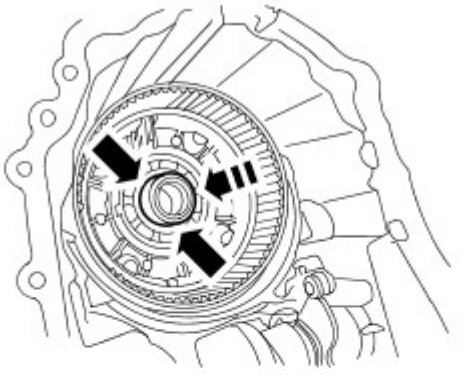

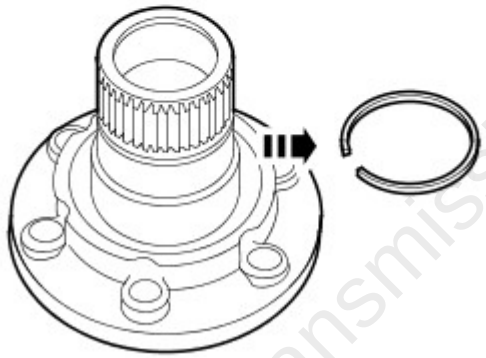

E62670

12. CAUTION: Care must be taken to avoid damage to the seal register and running surface.

Remove the output flange seal.

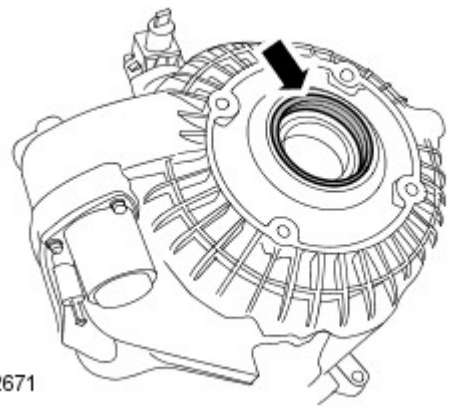

E62671

transmissionmanuals.com

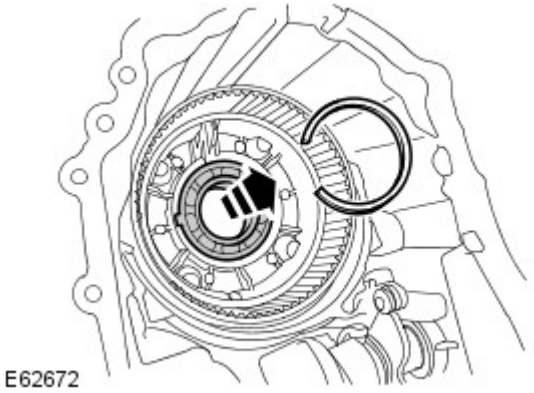
E62672

13. Remove the output flange bearing.

- Remove the circlip.

14. Release the front half of the transfer case from the flat surface.

- Remove the 2 bolts.

Installation

1. Remove the sealant from the transfer case mating faces.

2. Clean the magnetic filter.

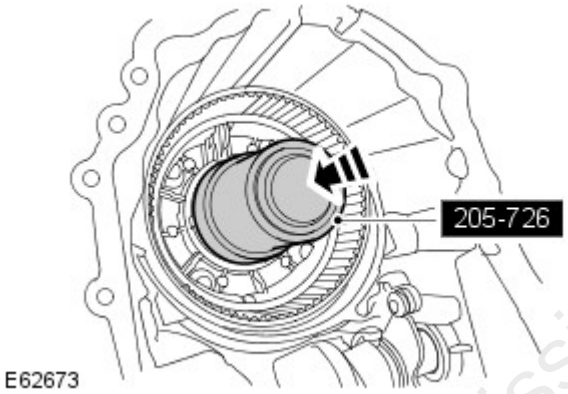

E62673

3. CAUTION: The chamfer on the bearing inner track must face the seal.

Using the special tool, install the output flange bearing.

- Clean the components mating faces.
- Install the circlip.

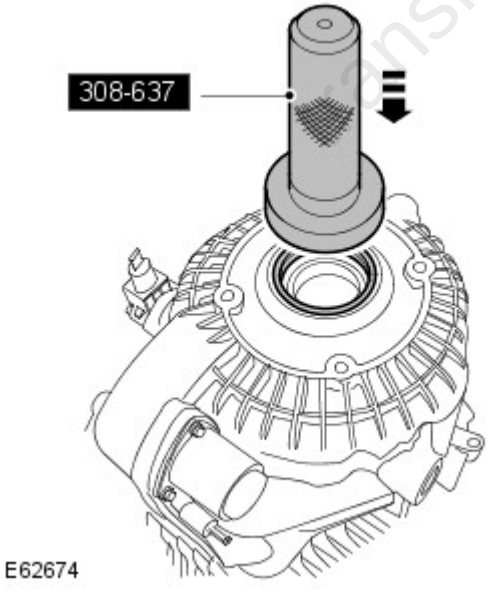

E62674

4. Using the special tool, install a new oil seal.

- Clean the component mating faces.
- Grease the new seal.

transmissionmanuals.com

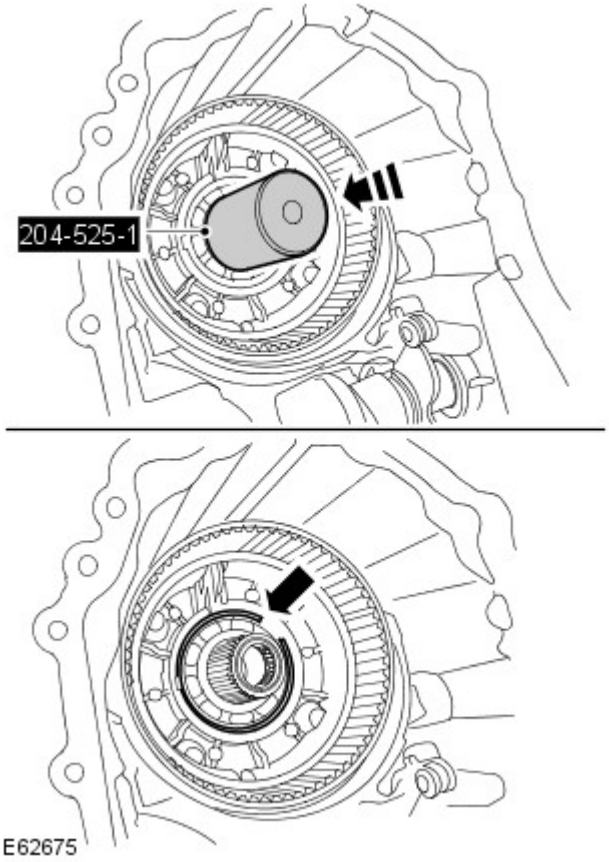

5. CAUTIONS:

Centralise the snap ring in the snap ring groove before installing the output flange.

Extreme care is necessary to make sure the snap ring enters the bearing squarely.

Using the special tool and with assistance, install the drive flange.

- Clean the component mating faces.
- Install a new snap ring.
- Make sure the snap ring is fully engaged and retains the drive flange.

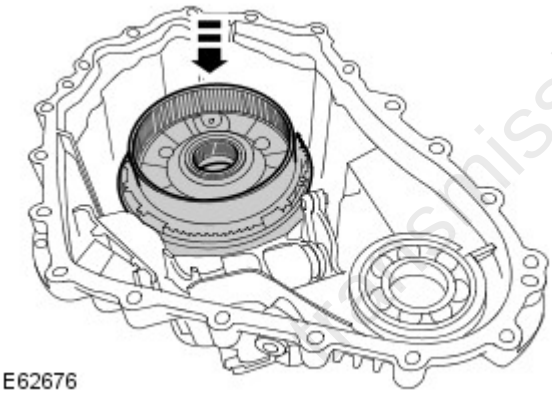

6. Secure the rear half of the transfer case with its rear face down on a flat surface.

7. NOTE: Rotate the differential to engage the splines.

Install the differential module.

- Clean the components.
- Install the spacer.

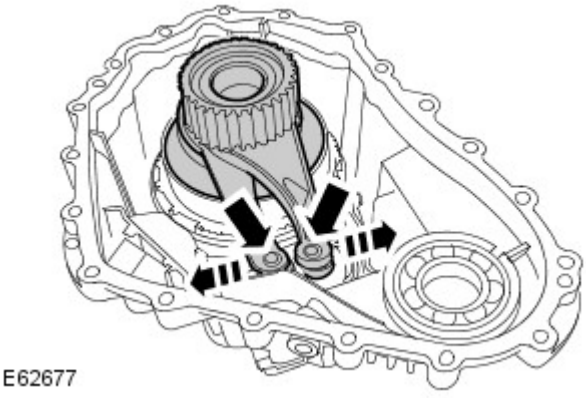

8. NOTE: Rotate the assembly to engage the clutch plates.

• NOTE: Use circlip pliers to open the actuator levers.

Install the clutch.

- Clean the components.
- Engage the actuator levers.

transmissionmanuals.com

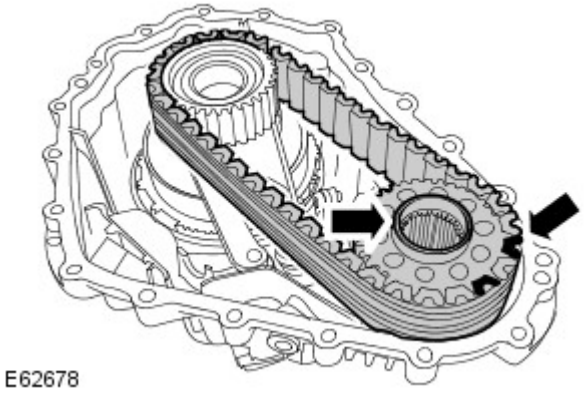

E62678

9. CAUTION: The dark links in the chain face up as shown.

• NOTE: The relieved splined inner diameter of the sprocket must face up as shown.

Install the chain and sprocket.

- Clean the components.

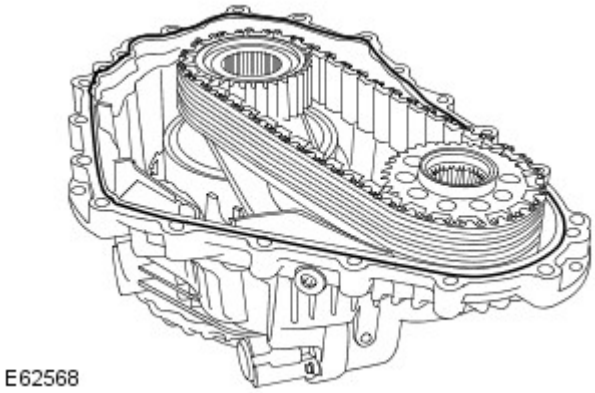

E62568

10. Apply a 2 mm bead of sealant to one surface of the transfer case mating face, as shown.

- Clean the component mating faces.
- Clean the dowels and dowel holes.

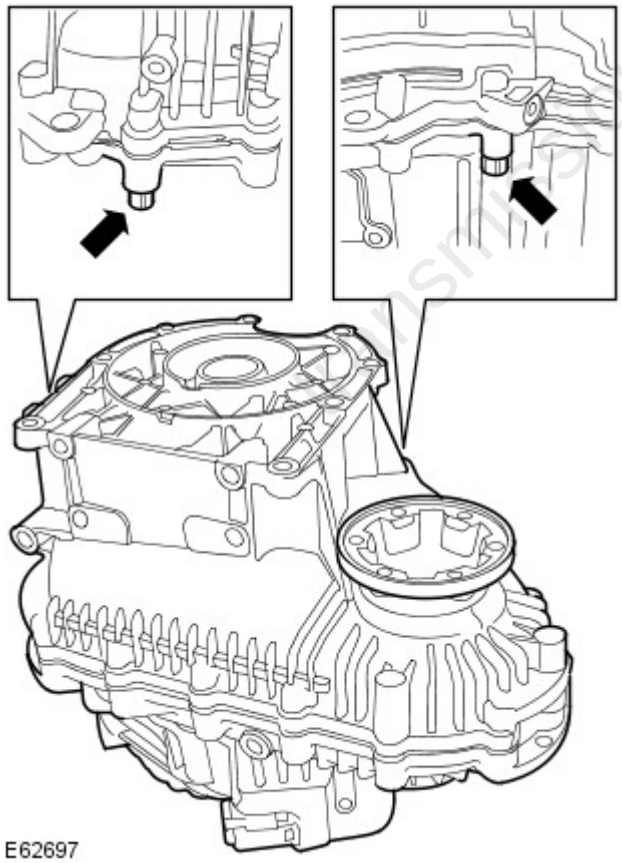

E62697

11. Install the front half of the transfer case.

- Evenly tighten the 2 Torx bolts shown to 35 Nm (26 lb.ft).

12. Tighten the remaining Torx bolts to 35 Nm (26 lb.ft).

13. Install the shift motor.

14. With assistance, release the transfer case from the flat surface.

15. Install the transfer case.

For additional information, refer to: Transfer Case - V6 4.0L Petrol (308-07B Transfer Case, Removal).

- Clean the components.
- Remove the 2 bolts.
- Tighten the Torx bolts to 25 Nm (18 lb.ft).

transmissionmanuals.com

16. Refill the transfer case with the recommended fluid.
    For additional information, refer to: Transfer Case Draining and Filling (308-07B Transfer Case, General Procedures).
17. Connect the battery ground cable.
    For additional information, refer to: Specifications (414-00 Battery and Charging System - General Information, Specifications).

transmissionmanuals.com

Published: 11-May-2011

Transfer Case - Transfer Case Rear Output Shaft SealV8 5.0L Petrol

In-vehicle Repair

Special Tool(s)	
	Remover/installer 205-726(LRT-54-015)
	Seal installer 308-637
	Installer 204-525/1

Removal

1. Disconnect the battery ground cable.
   For additional information, refer to: Specifications (414-00 Battery and Charging System - General Information, Specifications).

2. WARNING: Do not work on or under a vehicle supported only by a jack. Always support the vehicle on safety stands.

   Raise and support the vehicle.

3. Drain the transfer case fluid.
   For additional information, refer to: Transfer Case Draining and Filling (308-07B Transfer Case, General Procedures).

4. Remove the transfer case.
   For additional information, refer to: Transfer Case - V8 5.0L Petrol (308-07B Transfer Case, Removal).

5. With assistance, secure the transfer case with its transmission mating face down on a flat surface.

   - Secure with 2 bolts.

transmissionmanuals.com

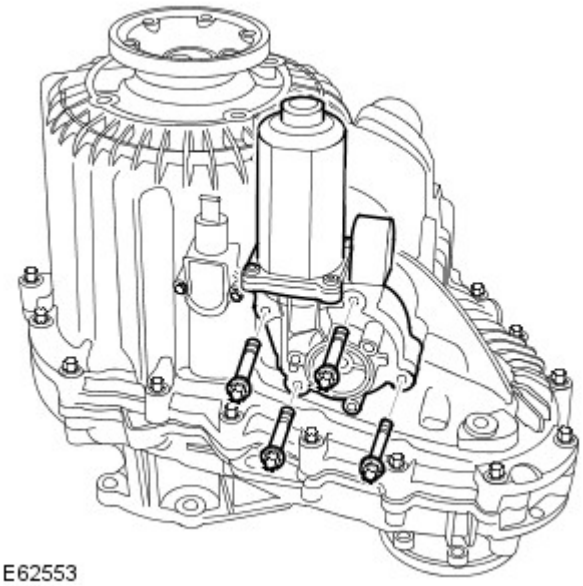

E62553

6. WARNING: Eye protection must be worn.

Remove the shift motor.

- Remove the 4 bolts.
- Remove any debris from the bolt holes.

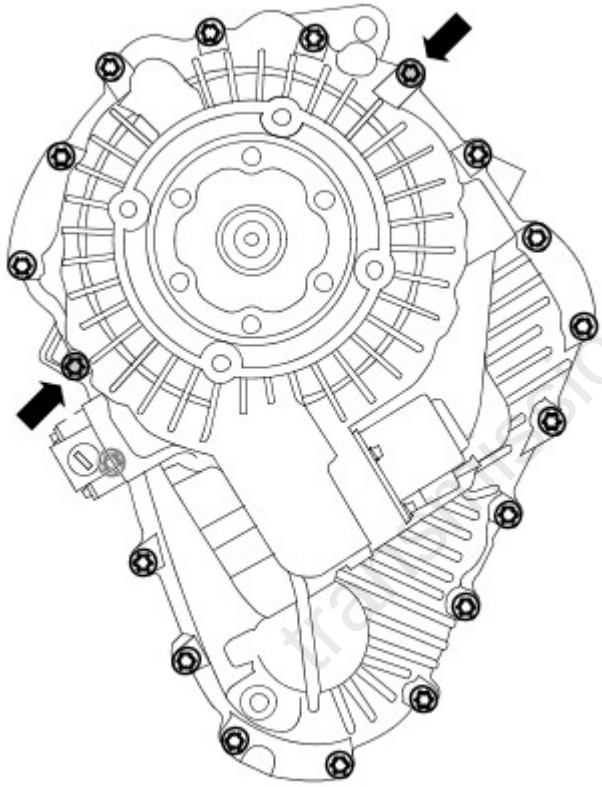

E62554

7. WARNING: Eye protection must be worn.

Remove 17 Torx bolts securing the transfer casings.

- The two bolts indicated remain fully tightened.
- Remove any debris from the bolt holes.

transmissionmanuals.com

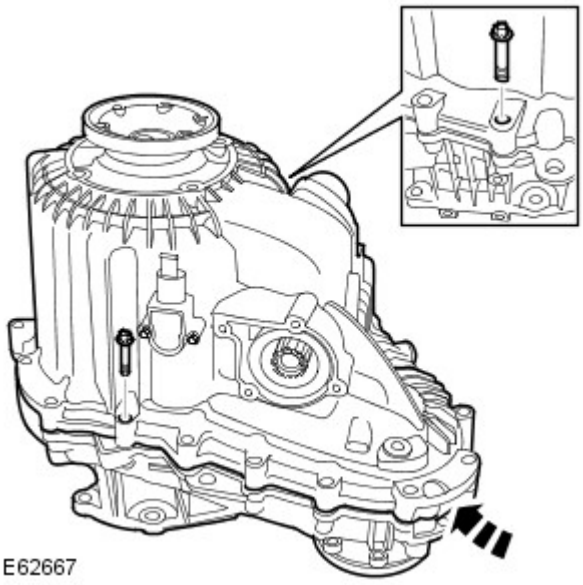
E62667

8. WARNING: Eye protection must be worn.

CAUTION: Care must be taken to avoid damage to the mating surfaces.

Remove the rear half of the transfer case.

- Remove the remaining 2 Torx bolts.
- Remove any debris from the bolt holes.
- Use a soft faced mallet.

9. Remove the differential module.

- Remove the spacer.

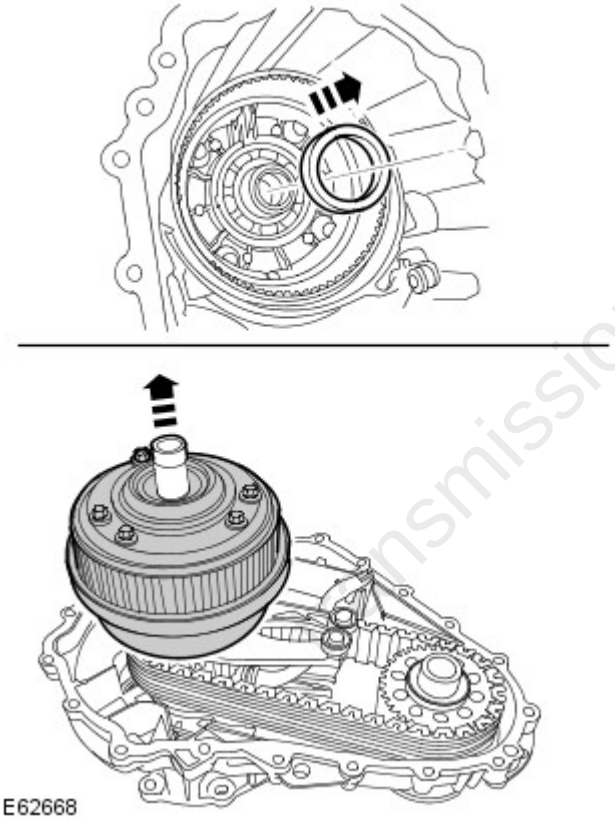
E62668

transmissionmanuals.com

10. NOTE: Remove as an assembly.

Remove the clutch, chain and sprocket.

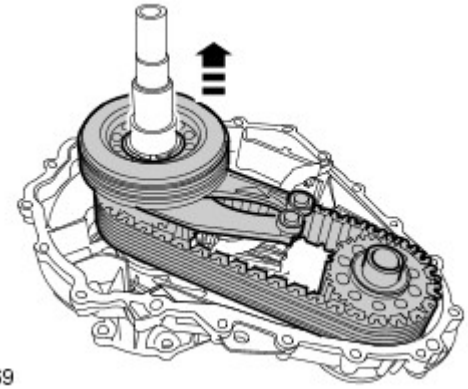

E62669

11. Remove the rear output flange.

- Compress the snap ring.
- Press the flange through the bearing.
- Remove and discard the snap ring.

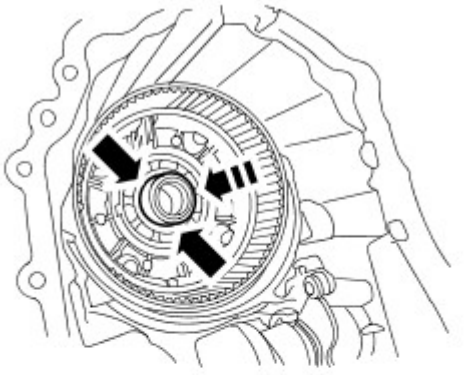

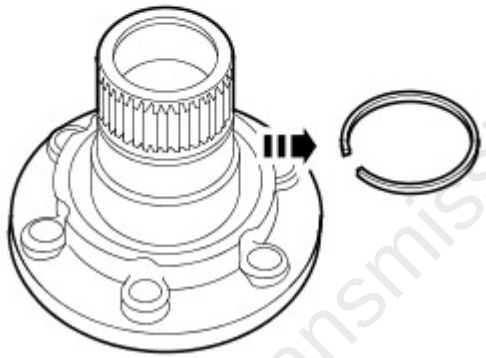

E62670

12. CAUTION: Care must be taken to avoid damage to the seal register and running surface.

Remove the output flange seal.

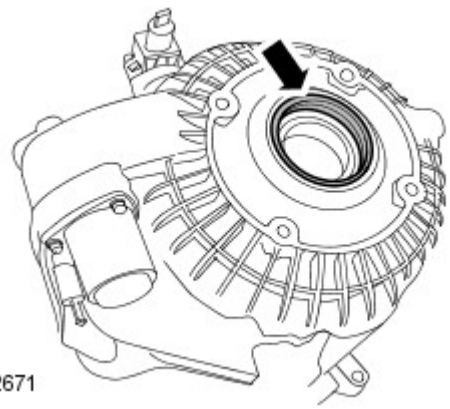

E62671

transmissionmanuals.com

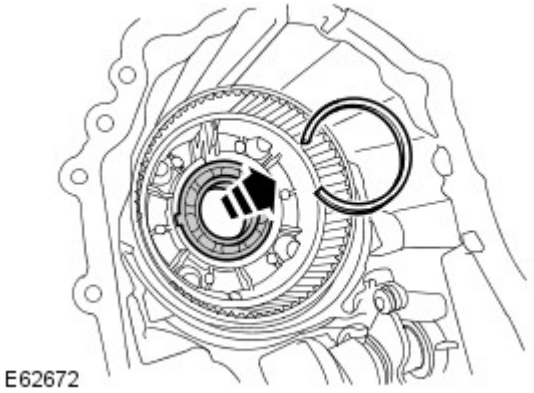
E62672

13. Remove the output flange bearing.

- Remove the circlip.

14. Release the front half of the transfer case from the flat surface.

- Remove the 2 bolts.

Installation

1. Remove the sealant from the transfer case mating faces.

2. Clean the magnetic filter.

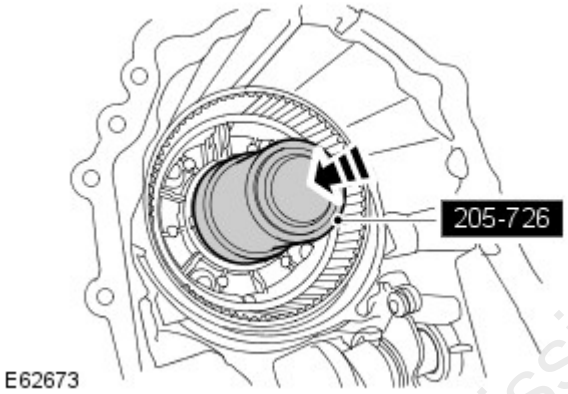

E62673

3. CAUTION: The chamfer on the bearing inner track must face the seal.

Using the special tool, install the output flange bearing.

- Clean the components mating faces.
- Install the circlip.

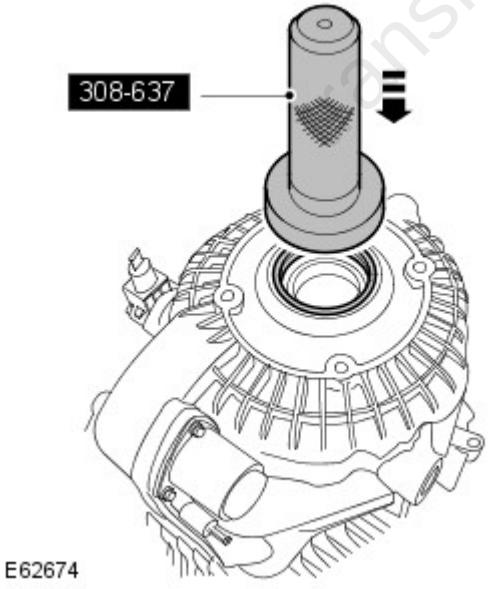

E62674

4. Using the special tool, install a new oil seal.

- Clean the component mating faces.
- Grease the new seal.

transmissionmanuals.com

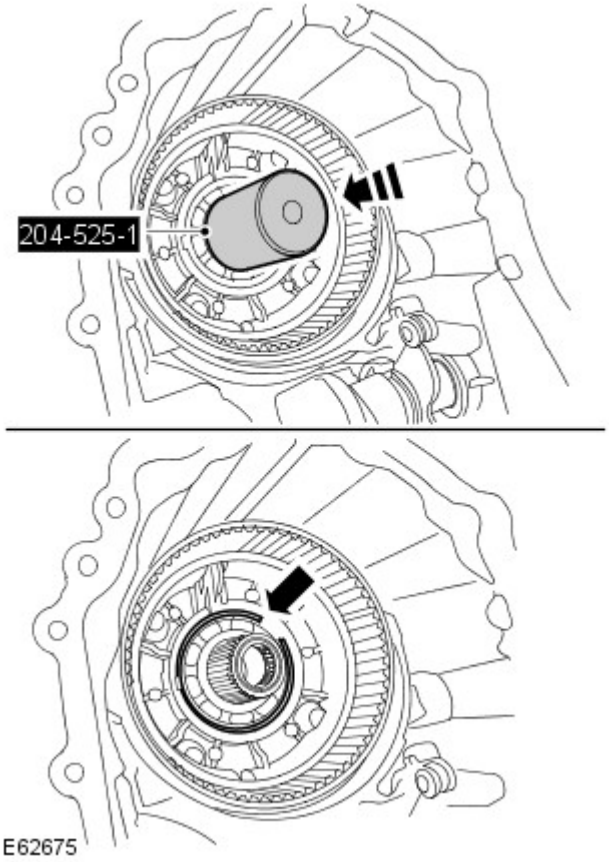

5. CAUTIONS:

Centralise the snap ring in the snap ring groove before installing the output flange.

Extreme care is necessary to make sure the snap ring enters the bearing squarely.

Using the special tool and with assistance, install the drive flange.

- Clean the component mating faces.
- Install a new snap ring.
- Make sure the snap ring is fully engaged and retains the drive flange.

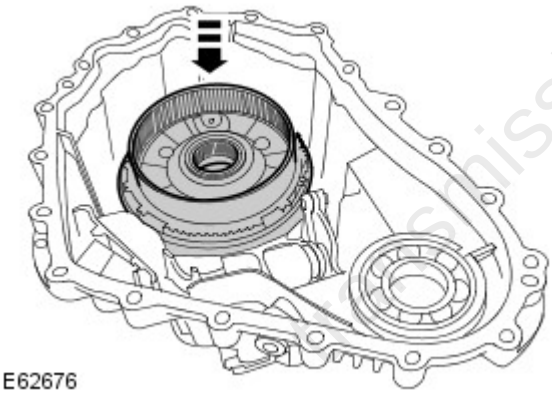

6. Secure the rear half of the transfer case with its rear face down on a flat surface.

7. NOTE: Rotate the differential to engage the splines.

Install the differential module.

- Clean the components.
- Install the spacer.

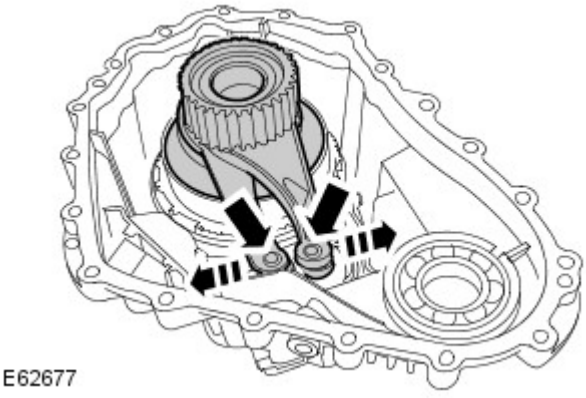

8. NOTE: Rotate the assembly to engage the clutch plates.

• NOTE: Use circlip pliers to open the actuator levers.

Install the clutch.

- Clean the components.
- Engage the actuator levers.

transmissionmanuals.com

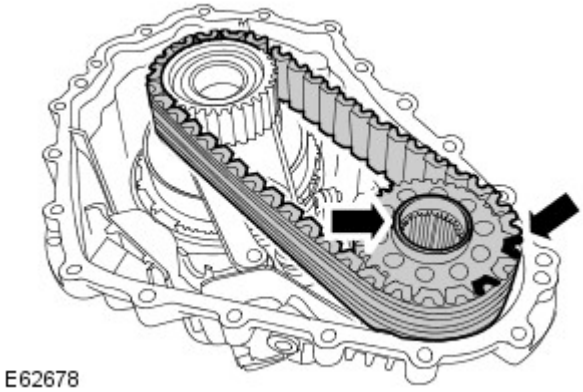

E62678

9. CAUTION: The dark links in the chain face up as shown.

• NOTE: The relieved splined inner diameter of the sprocket must face up as shown.

Install the chain and sprocket.

- Clean the components.

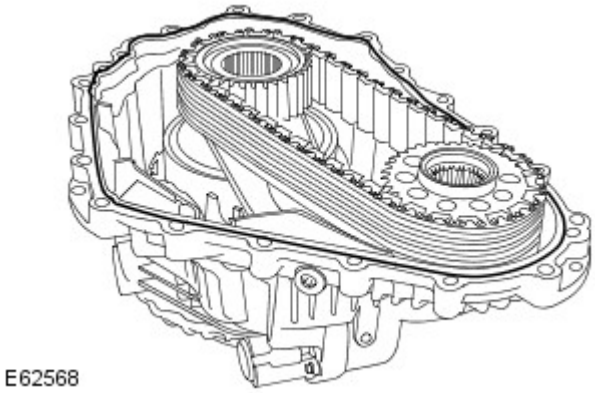

E62568

10. Apply a 2 mm bead of sealant to one surface of the transfer case mating face, as shown.

- Clean the component mating faces.
- Clean the dowels and dowel holes.

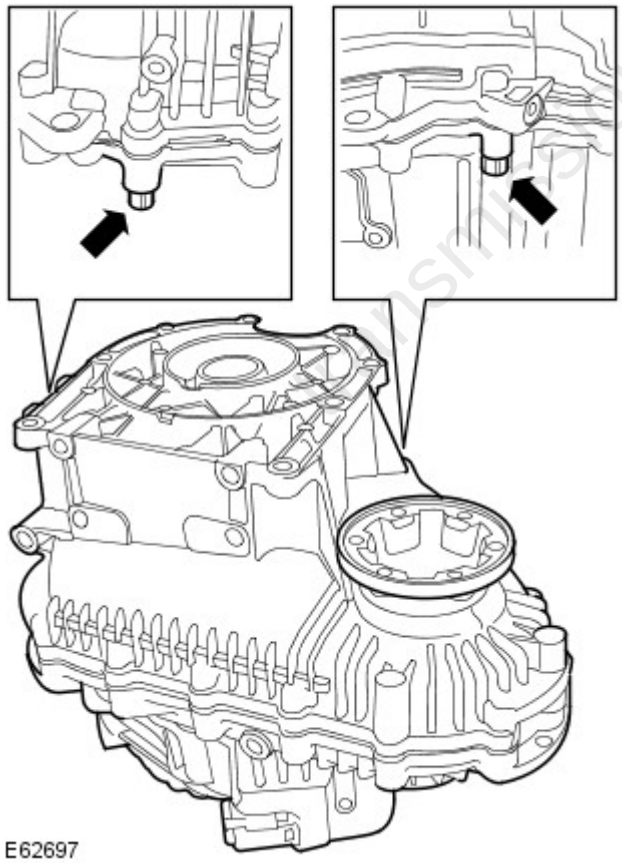

E62697

11. Install the front half of the transfer case.

- Evenly tighten the 2 Torx bolts shown to 35 Nm (26 lb.ft).

12. Tighten the remaining Torx bolts to 35 Nm (26 lb.ft).

13. Install the shift motor.

14. With assistance, release the transfer case from the flat surface.

15. Install the transfer case.

- Clean the components.
- Remove the 2 bolts.
- Tighten the Torx bolts to 25 Nm (18 lb.ft).

For additional information, refer to: Transfer Case - V8 5.0L Petrol (308-07B Transfer Case, Removal).

transmissionmanuals.com

16. Refill the transfer case with the recommended fluid.
    For additional information, refer to: Transfer Case Draining and Filling (308-07B Transfer Case, General Procedures).
17. Connect the battery ground cable.
    For additional information, refer to: Specifications (414-00 Battery and Charging System - General Information, Specifications).

transmissionmanuals.com

Published: 11-May-2011

Transfer Case - Transfer Case Rear Output Shaft SealTDV6 2.7L Diesel

In-vehicle Repair

Special Tool(s)	
	Remover/installer (LRT-54-015) 205-726
	Seal installer 308-637
	Installer 204-525/1

Removal

1. Disconnect the battery ground cable.
For additional information, refer to: Specifications (414-00 Battery and Charging System - General Information, Specifications).

2. WARNING: Do not work on or under a vehicle supported only by a jack. Always support the vehicle on safety stands.

Raise and support the vehicle.

3. Drain the transfer case fluid.
For additional information, refer to: Transfer Case Draining and Filling (308-07B Transfer Case, General Procedures).

4. Remove the transfer case.
For additional information, refer to: Transfer Case - TDV6 3.0L Diesel (308-07B Transfer Case, Removal).

5. With assistance, secure the transfer case with its transmission mating face down on a flat surface.

- Secure with 2 bolts.

transmissionmanuals.com

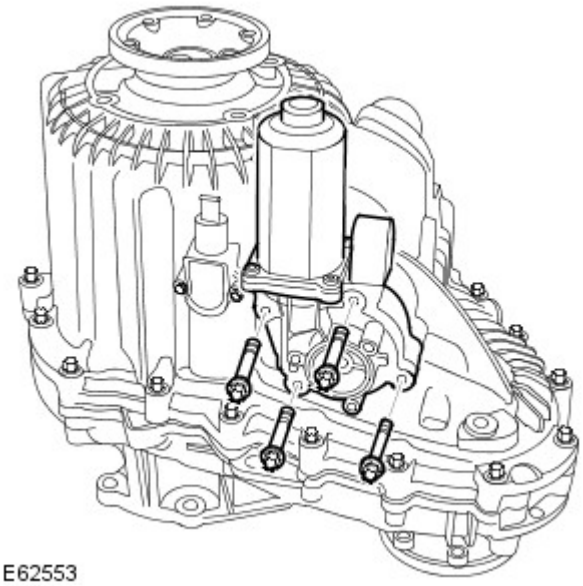

E62553

6. WARNING: Eye protection must be worn.

Remove the shift motor.

- Remove the 4 bolts.
- Remove any debris from the bolt holes.

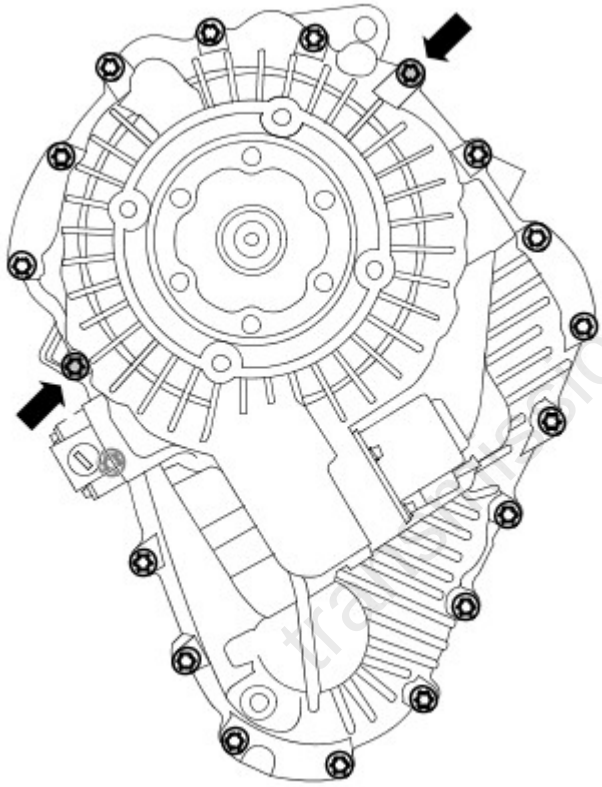

E62554

7. WARNING: Eye protection must be worn.

Remove 17 Torx bolts securing the transfer casings.

- The two bolts indicated remain fully tightened.
- Remove any debris from the bolt holes.

transmissionmanuals.com

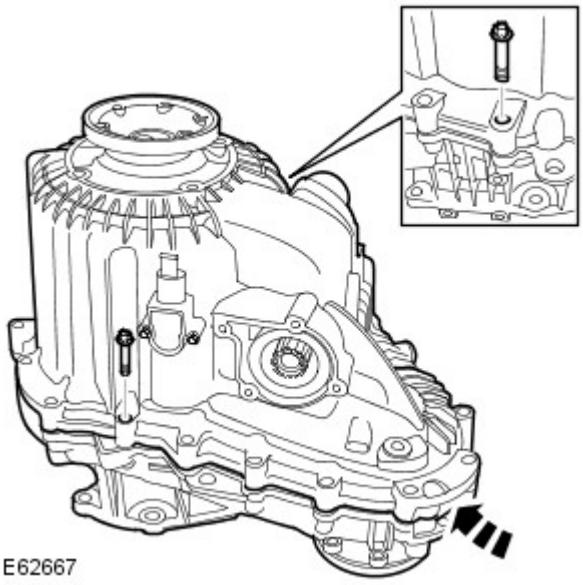
E62667

8. WARNING: Eye protection must be worn.

CAUTION: Care must be taken to avoid damage to the mating surfaces.

Remove the rear half of the transfer case.

- Remove the remaining 2 Torx bolts.
- Remove any debris from the bolt holes.
- Use a soft faced mallet.

9. Remove the differential module.

- Remove the spacer.

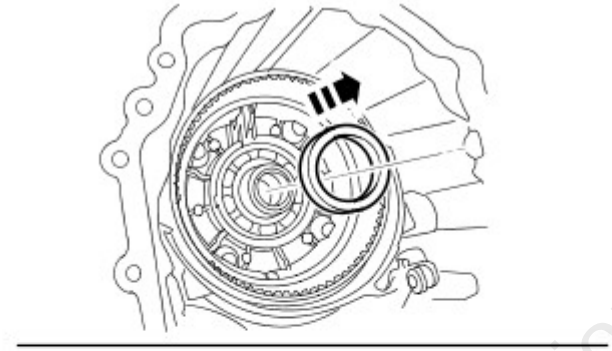

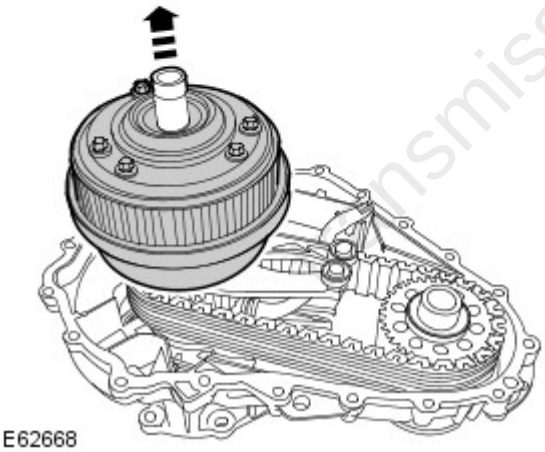
E62668

transmissionmanuals.com

10. NOTE: Remove as an assembly.

Remove the clutch, chain and sprocket.

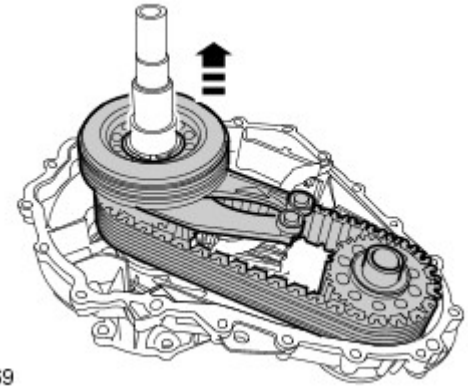

E62669

11. Remove the rear output flange.

- Compress the snap ring.
- Press the flange through the bearing.
- Remove and discard the snap ring.

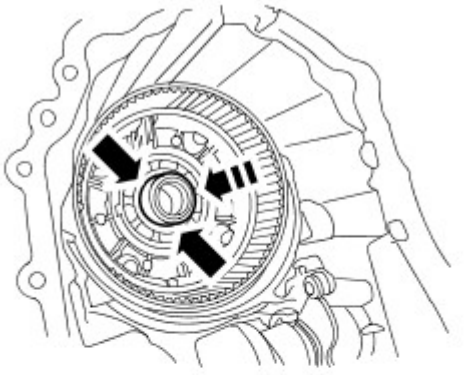

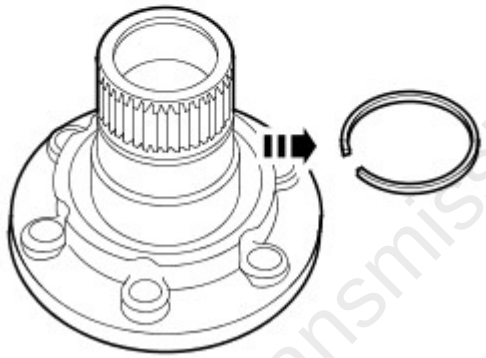

E62670

12. CAUTION: Care must be taken to avoid damage to the seal register and running surface.

Remove the output flange seal.

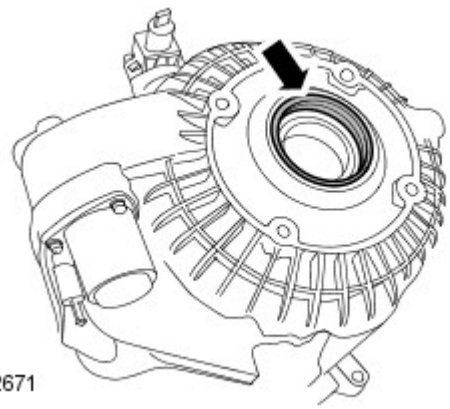

E62671

transmissionmanuals.com

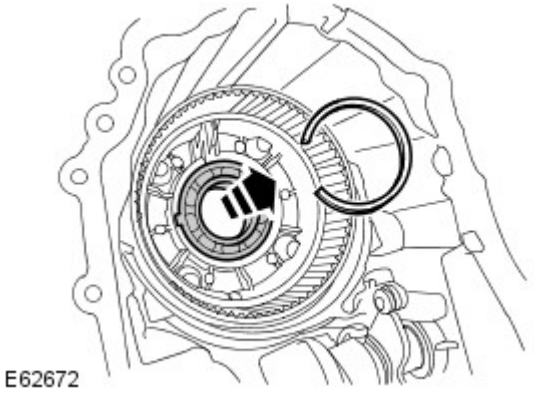
E62672

13. Remove the output flange bearing.

- Remove the circlip.

14. Release the front half of the transfer case from the flat surface.

- Remove the 2 bolts.

Installation

1. Remove the sealant from the transfer case mating faces.

2. Clean the magnetic filter.

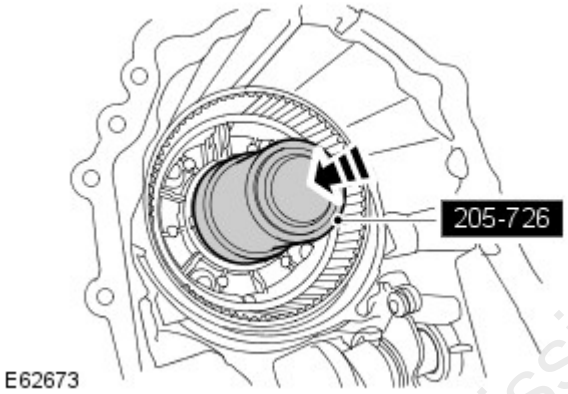

E62673

3. CAUTION: The chamfer on the bearing inner track must face the seal.

Using the special tool, install the output flange bearing.

- Clean the components mating faces.
- Install the circlip.

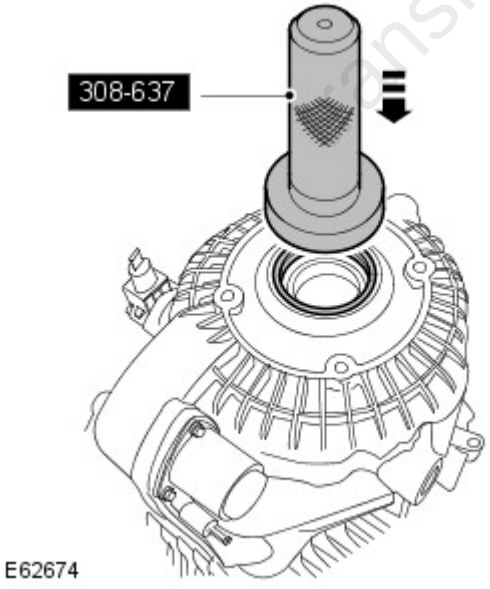

E62674

4. Using the special tool, install a new oil seal.

- Clean the component mating faces.
- Grease the new seal.

transmissionmanuals.com

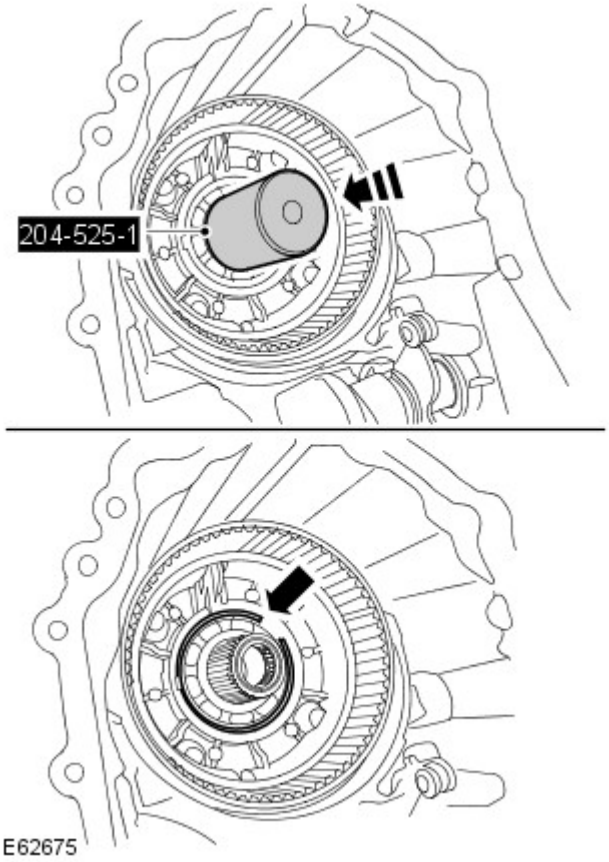

5. CAUTIONS:

Centralise the snap ring in the snap ring groove before installing the output flange.

Extreme care is necessary to make sure the snap ring enters the bearing squarely.

Using the special tool and with assistance, install the drive flange.

- Clean the component mating faces.
- Install a new snap ring.
- Make sure the snap ring is fully engaged and retains the drive flange.

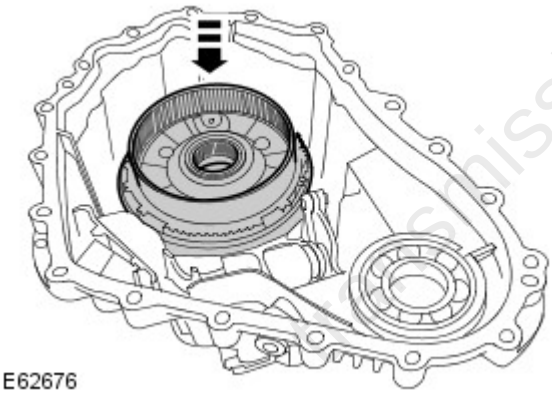

6. Secure the rear half of the transfer case with its rear face down on a flat surface.

7. NOTE: Rotate the differential to engage the splines.

Install the differential module.

- Clean the components.
- Install the spacer.

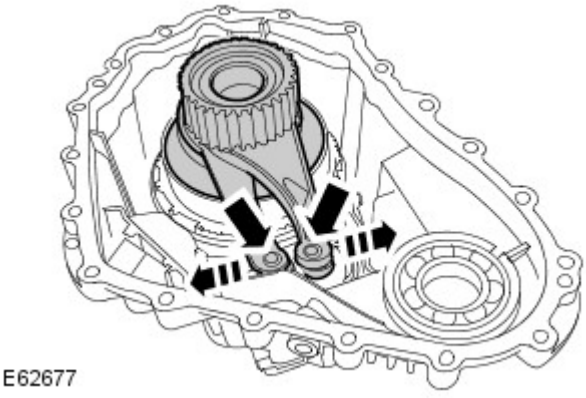

8. NOTE: Rotate the assembly to engage the clutch plates.

• NOTE: Use circlip pliers to open the actuator levers.

Install the clutch.

- Clean the components.
- Engage the actuator levers.

transmissionmanuals.com

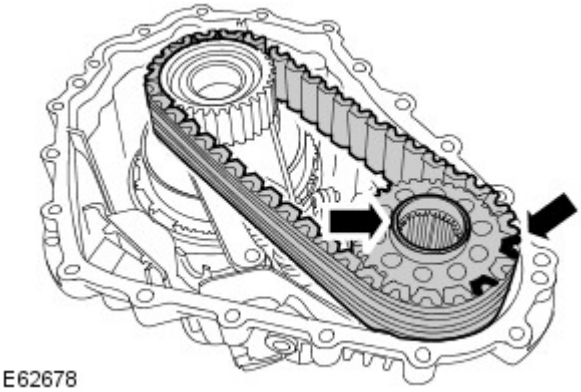

E62678

9. CAUTION: The dark links in the chain face up as shown.

• NOTE: The relieved splined inner diameter of the sprocket must face up as shown.

Install the chain and sprocket.

- Clean the components.

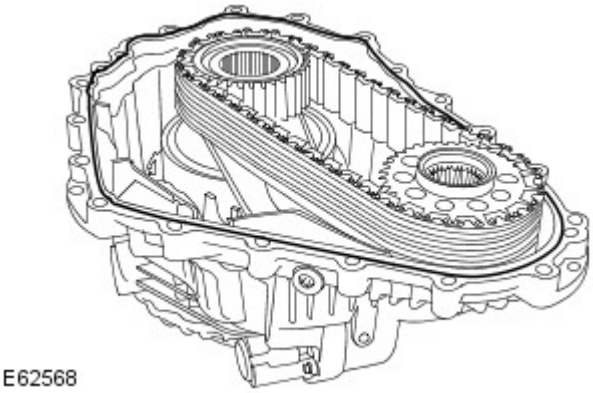

E62568

10. Apply a 2 mm bead of sealant to one surface of the transfer case mating face, as shown.

- Clean the component mating faces.
- Clean the dowels and dowel holes.

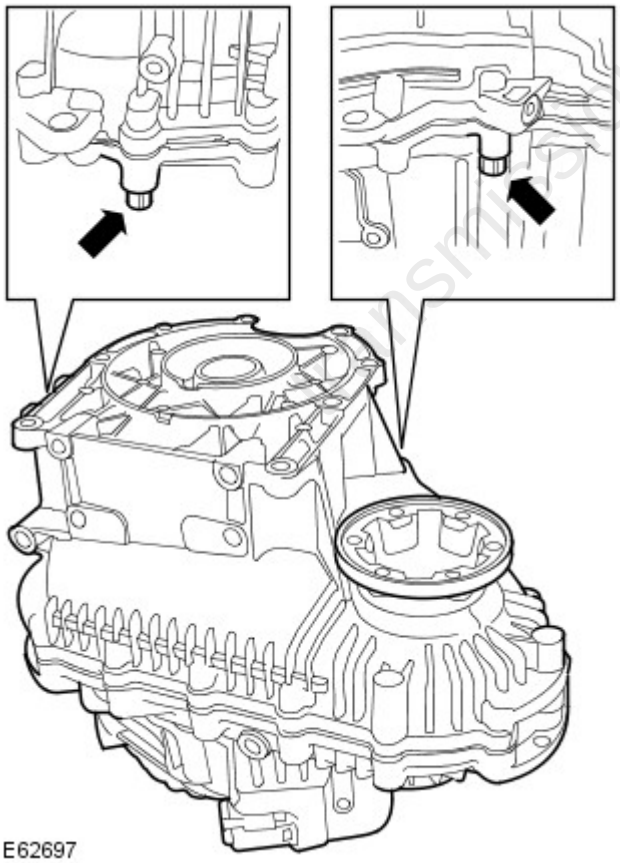

E62697

11. Install the front half of the transfer case.

- Evenly tighten the 2 Torx bolts shown to 35 Nm (26 lb.ft).

12. Tighten the remaining Torx bolts to 35 Nm (26 lb.ft).

13. Install the shift motor.

- Clean the components.
- Remove the 2 bolts.
- Tighten the Torx bolts to 25 Nm (18 lb.ft).

14. With assistance, release the transfer case from the flat surface.

15. Install the transfer case.

For additional information, refer to: Transfer Case - TDV6 3.0L Diesel (308-07B Transfer Case, Removal).

fordtransmissionmanuals.com

16. Refill the transfer case with the recommended fluid.
    For additional information, refer to: Transfer Case Draining and Filling (308-07B Transfer Case, General Procedures).
17. Connect the battery ground cable.
    For additional information, refer to: Specifications (414-00 Battery and Charging System - General Information, Specifications).

transmissionmanuals.com

Published: 11-May-2011

Transfer Case - Transfer Case Rear Output Shaft SealTDV6 3.0L Diesel

In-vehicle Repair

Special Tool(s)	
	Remover/installer 205-726(LRT-54-015)
	Seal installer 308-637
	Installer 204-525/1

Removal

1. Disconnect the battery ground cable.
   For additional information, refer to: Specifications (414-00 Battery and Charging System - General Information, Specifications).

2. WARNING: Do not work on or under a vehicle supported only by a jack. Always support the vehicle on safety stands.

   Raise and support the vehicle.

3. Drain the transfer case fluid.
   For additional information, refer to: Transfer Case Draining and Filling (308-07B Transfer Case, General Procedures).

4. Remove the transfer case.
   For additional information, refer to: Transfer Case - TDV6 3.0L Diesel (308-07B Transfer Case, Removal).

5. With assistance, secure the transfer case with its transmission mating face down on a flat surface.

   - Secure with 2 bolts.

transmissionmanuals.com

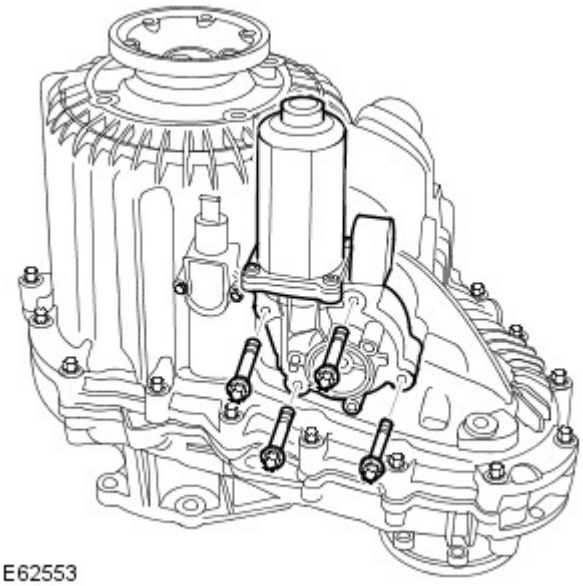

E62553

6. WARNING: Eye protection must be worn.

Remove the shift motor.

- Remove the 4 bolts.
- Remove any debris from the bolt holes.

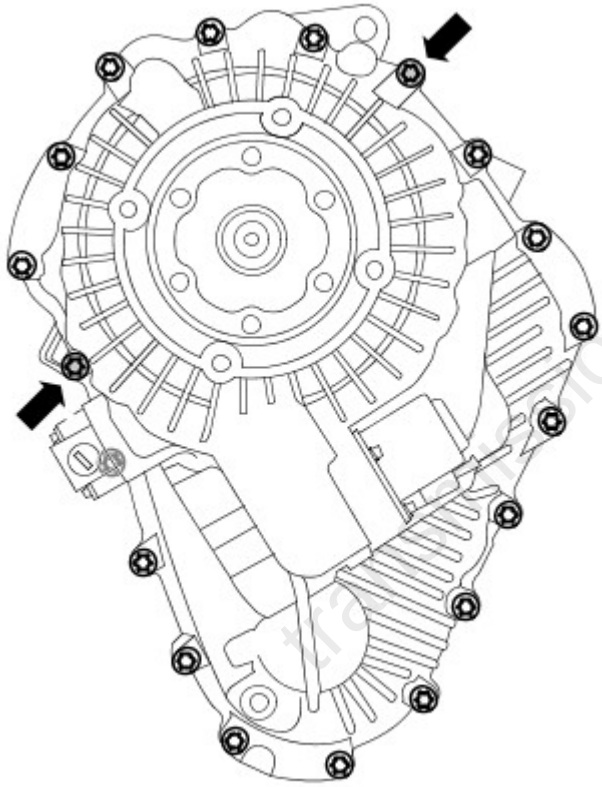

E62554

7. WARNING: Eye protection must be worn.

Remove 17 Torx bolts securing the transfer casings.

- The two bolts indicated remain fully tightened.
- Remove any debris from the bolt holes.

transmissionmanuals.com

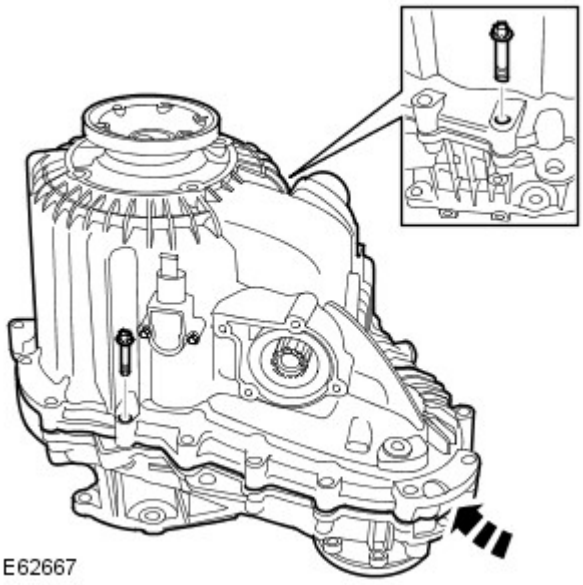
E62667

8. WARNING: Eye protection must be worn.

CAUTION: Care must be taken to avoid damage to the mating surfaces.

Remove the rear half of the transfer case.

- Remove the remaining 2 Torx bolts.
- Remove any debris from the bolt holes.
- Use a soft faced mallet.

9. Remove the differential module.

- Remove the spacer.

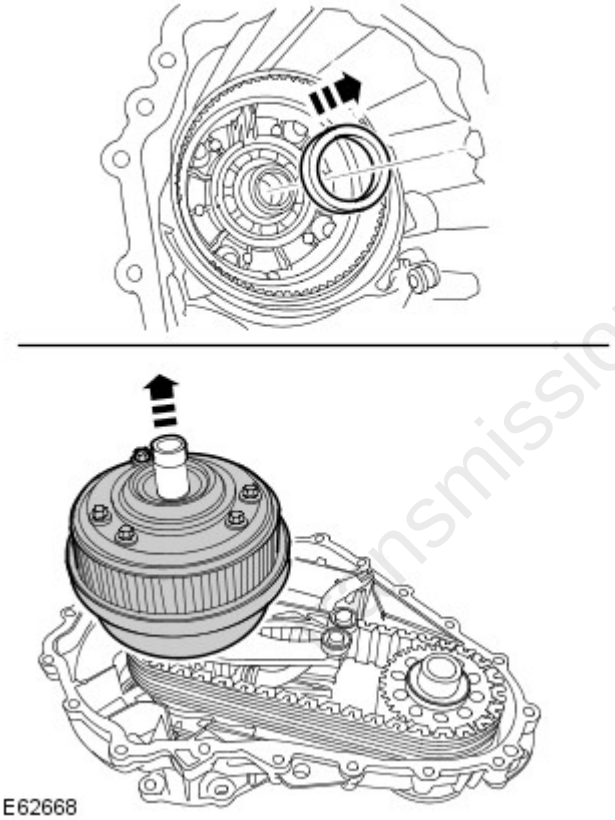
E62668

transmissionmanuals.com

10. NOTE: Remove as an assembly.

Remove the clutch, chain and sprocket.

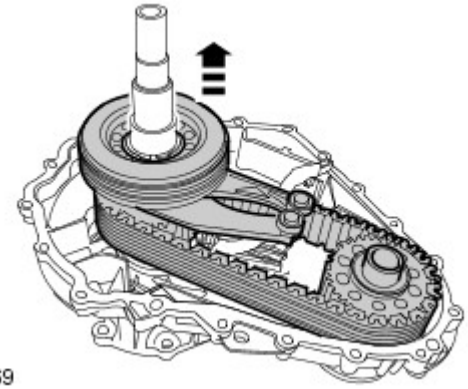

E62669

11. Remove the rear output flange.

- Compress the snap ring.
- Press the flange through the bearing.
- Remove and discard the snap ring.

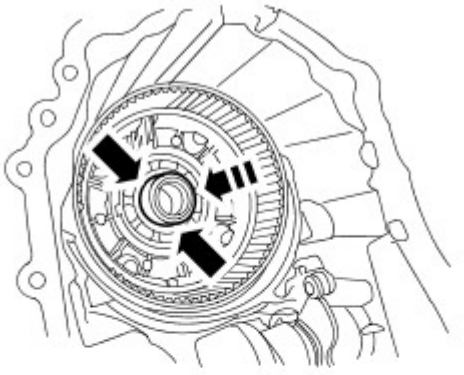

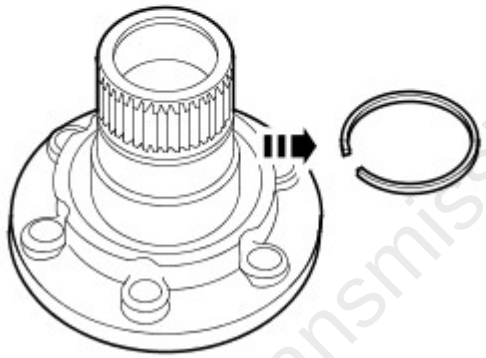

E62670

12. CAUTION: Care must be taken to avoid damage to the seal register and running surface.

Remove the output flange seal.

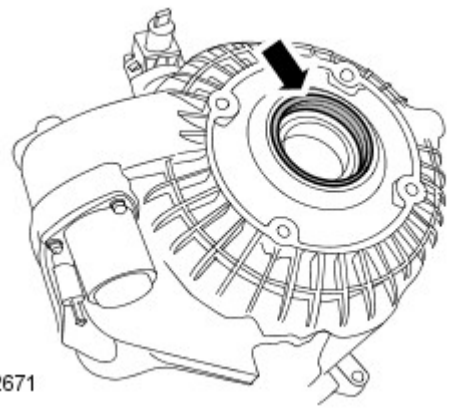

E62671

transmissionmanuals.com

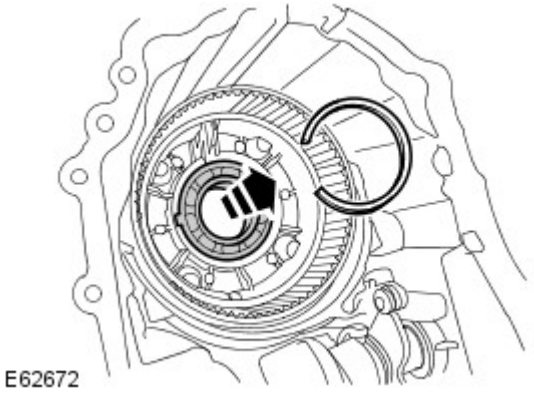
E62672

13. Remove the output flange bearing.

- Remove the circlip.

14. Release the front half of the transfer case from the flat surface.

- Remove the 2 bolts.

Installation

1. Remove the sealant from the transfer case mating faces.

2. Clean the magnetic filter.

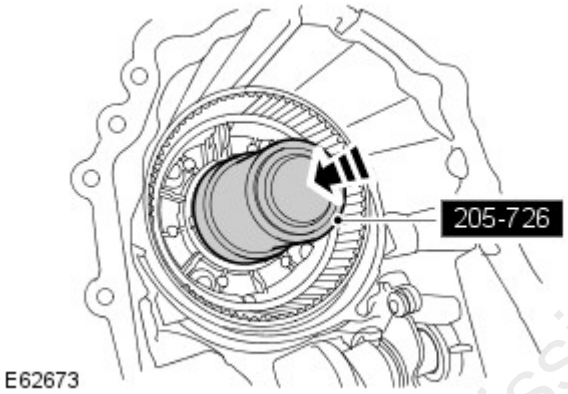

E62673

3. CAUTION: The chamfer on the bearing inner track must face the seal.

Using the special tool, install the output flange bearing.

- Clean the components mating faces.
- Install the circlip.

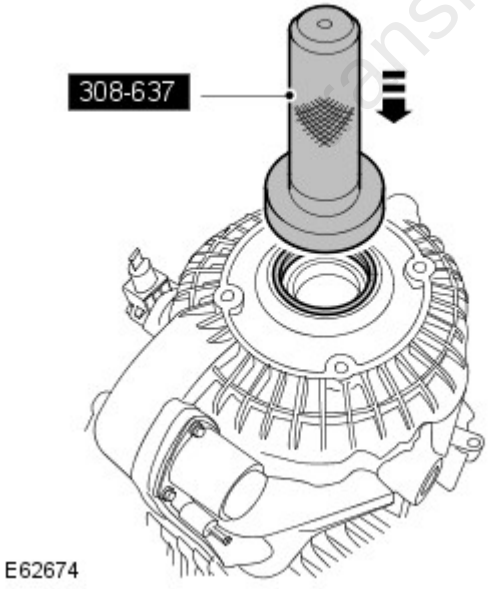

E62674

4. Using the special tool, install a new oil seal.

- Clean the component mating faces.
- Grease the new seal.

transmissionmanuals.com

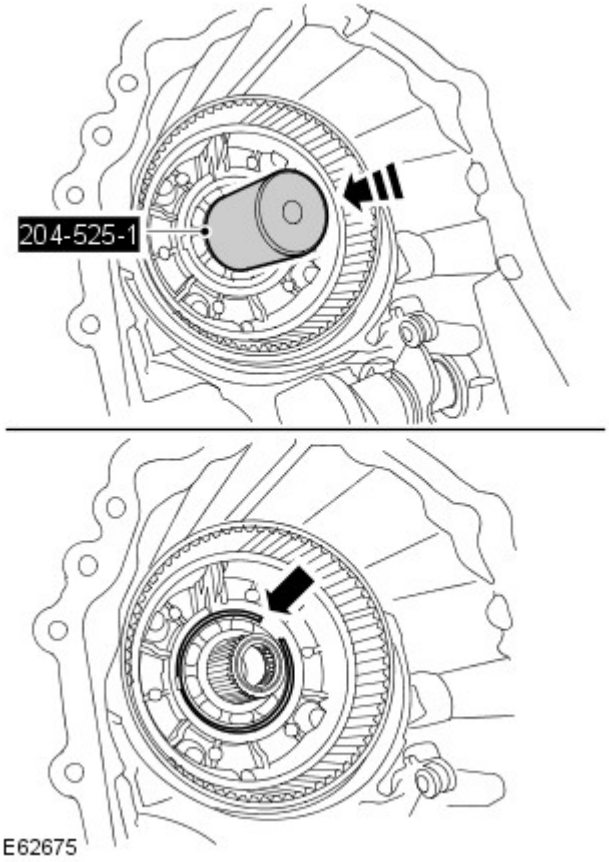

5. CAUTIONS:

Centralise the snap ring in the snap ring groove before installing the output flange.

Extreme care is necessary to make sure the snap ring enters the bearing squarely.

Using the special tool and with assistance, install the drive flange.

- Clean the component mating faces.
- Install a new snap ring.
- Make sure the snap ring is fully engaged and retains the drive flange.

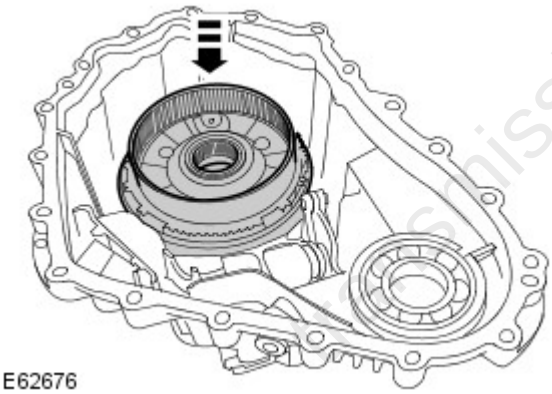

6. Secure the rear half of the transfer case with its rear face down on a flat surface.

7. NOTE: Rotate the differential to engage the splines.

Install the differential module.

- Clean the components.
- Install the spacer.

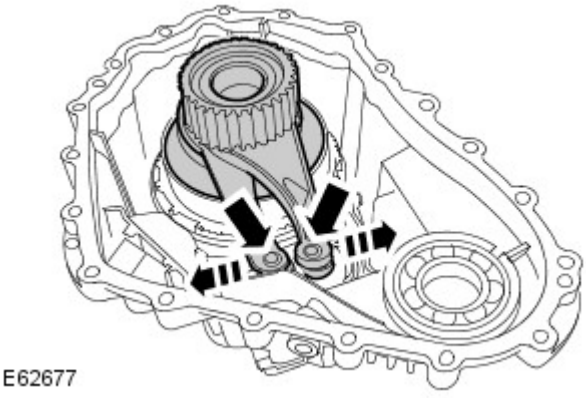

8. NOTE: Rotate the assembly to engage the clutch plates.

• NOTE: Use circlip pliers to open the actuator levers.

Install the clutch.

- Clean the components.
- Engage the actuator levers.

transmissionmanuals.com

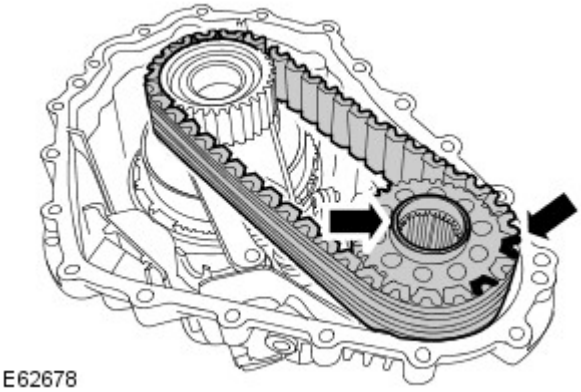

E62678

9. CAUTION: The dark links in the chain face up as shown.

• NOTE: The relieved splined inner diameter of the sprocket must face up as shown.

Install the chain and sprocket.

- Clean the components.

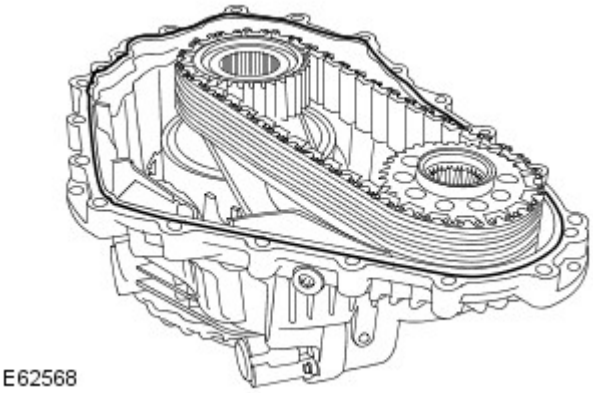

E62568

10. Apply a 2 mm bead of sealant to one surface of the transfer case mating face, as shown.

- Clean the component mating faces.
- Clean the dowels and dowel holes.

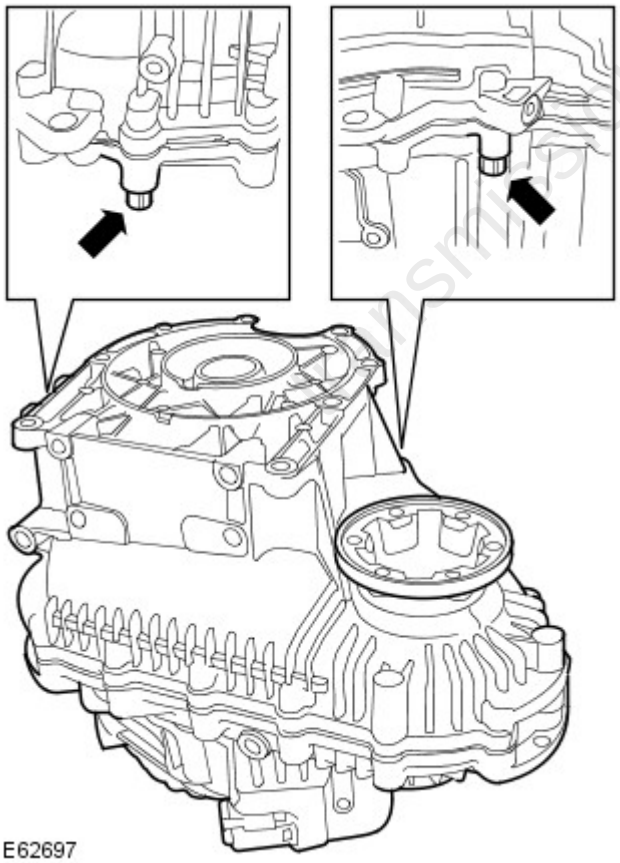

E62697

11. Install the front half of the transfer case.

- Evenly tighten the 2 Torx bolts shown to 35 Nm (26 lb.ft).

12. Tighten the remaining Torx bolts to 35 Nm (26 lb.ft).

13. Install the shift motor.

- Clean the components.
- Remove the 2 bolts.
- Tighten the Torx bolts to 25 Nm (18 lb.ft).

14. With assistance, release the transfer case from the flat surface.

15. Install the transfer case.

For additional information, refer to: Transfer Case - TDV6 3.0L Diesel (308-07B Transfer Case, Removal).

fordtransmissionmanuals.com

16. Refill the transfer case with the recommended fluid.
    For additional information, refer to: Transfer Case Draining and Filling (308-07B Transfer Case, General Procedures).
17. Connect the battery ground cable.
    For additional information, refer to: Specifications (414-00 Battery and Charging System - General Information, Specifications).

transmissionmanuals.com

Published: 11-May-2011

Transfer Case - Transfer CaseTDV6 2.7L Diesel

Removal

Special Tool(s)	
303-1069  E53727	Wrench adaptor 303-1069

Removal

All vehicles

1. Disconnect the battery ground cable.
   For additional information, refer to: Specifications (414-00 Battery and Charging System - General Information, Specifications).

2. WARNING: Do not work on or under a vehicle supported only by a jack. Always support the vehicle on safety stands.

   Raise and support the vehicle.

Vehicles with diesel particulate filter (DPF)

3. Remove the diesel particulate filter (DPF).For additional information, refer to: Diesel Particulate Filter (DPF) (309-00A Exhaust System - TDV6 2.7L Diesel, Removal and Installation).

All vehicles

4. Remove the transmission crossmember.
   For additional information, refer to: Transmission Support Crossmember - V6 4.0L Petrol/TDV6 2.7L Diesel (502-02 Full Frame and Body Mounting, Removal and Installation).

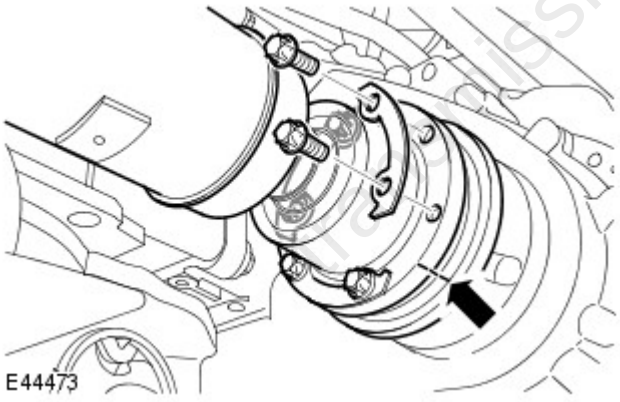
E44473

5. CAUTION: To avoid damage to the joint or gaiter, do not allow the driveshaft to hang.

• NOTE: Mark the position of the driveshaft on the transmission flange.

Release the front driveshaft from the transfer case drive flange.

- Remove the 6 Torx bolts and washers, discard the bolts.
- Using a suitable tie strap, reposition and secure the driveshaft to the exhaust system.

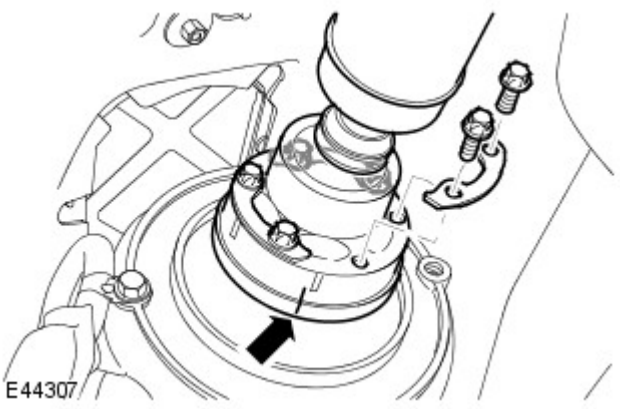
E44307

6. CAUTION: To avoid damage to the joint or gaiter, do not allow the driveshaft to hang.

• NOTE: Mark the position of the driveshaft on the transmission flange.

Release the rear driveshaft from the transfer case drive flange.

- Remove the 6 Torx bolts and washers.
- Using a suitable tie strap, secure the driveshaft.

7. Disconnect the transfer case 3 electrical connectors.

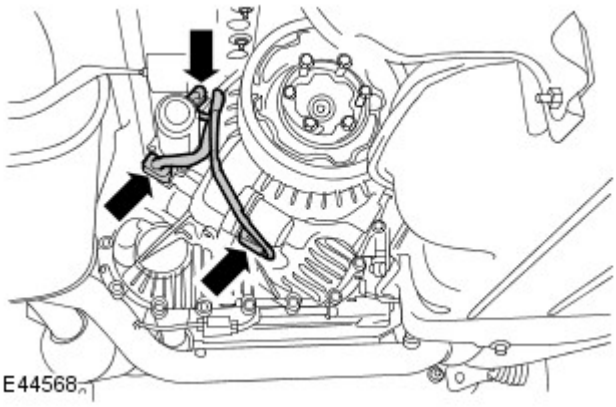

8. Remove the ground cable from the transfer box.

- Remove the bolt.

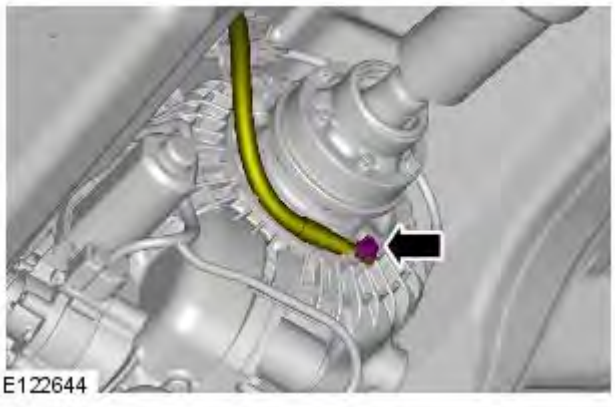

9. NOTE: Some variation in the illustrations may occur, but the essential information is always correct.

Release the wiring harness from the transfer case.

- Release the clip.
- Remove the 3 bolts.

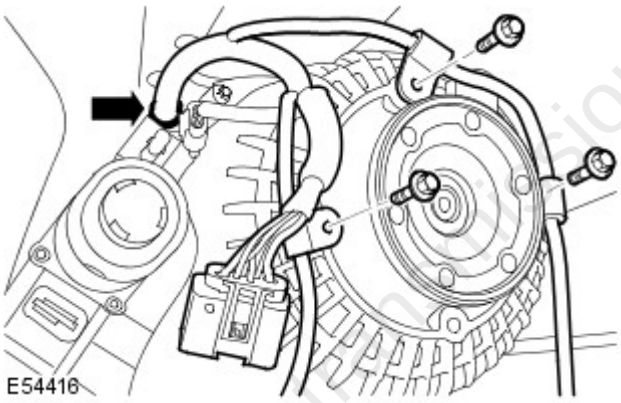

10. Release the wiring harness from the transfer case.

- Remove the bolt.

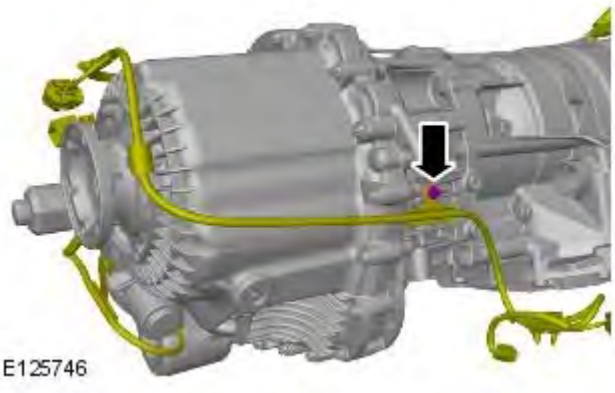

transmissionmanuals.com

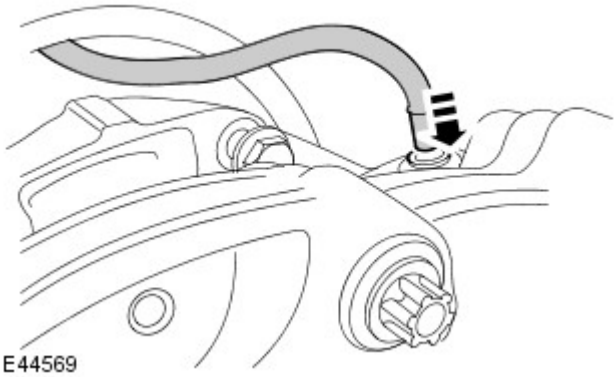
E44569

11. CAUTION: Always plug any open connections to prevent contamination.

Disconnect the breather line.

- Depress the locking ring.

12. WARNING: Secure the component to the transmission jack.

Using a transmission jack, support the transfer case.

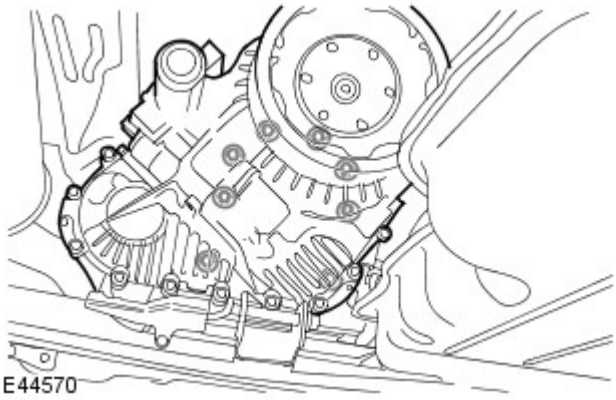
E44570

13. CAUTION: Take extra care not to damage the wiring harnesses.

With assistance, remove the transfer case.

- Remove the 8 bolts.

14. Remove and discard the O-ring seal.


E127507

transmissionmanuals.com

Published: 11-May-2011

Transfer Case - Transfer CaseTDV6 3.0L Diesel

Removal

Special Tool(s)	
303-1069  E53727	Wrench adaptor 303-1069

Removal

All vehicles

• NOTE: Some variation in the illustrations may occur, but the essential information is always correct.

1. Disconnect the battery ground cable.
For additional information, refer to: Specifications (414-00 Battery and Charging System - General Information, Specifications).

2. WARNING: Do not work on or under a vehicle supported only by a jack. Always support the vehicle on safety stands.

Raise and support the vehicle.

Vehicles with diesel particulate filter (DPF)

3. Remove the diesel particulate filter (DPF).
For additional information, refer to: Diesel Particulate Filter (DPF) (309-00B Exhaust System - TDV6 3.0L Diesel, Removal and Installation).

All vehicles

4. Remove the transmission crossmember.
For additional information, refer to: Transmission Support Crossmember - TDV6 3.0L Diesel (502-02 Full Frame and Body Mounting, Removal and Installation).

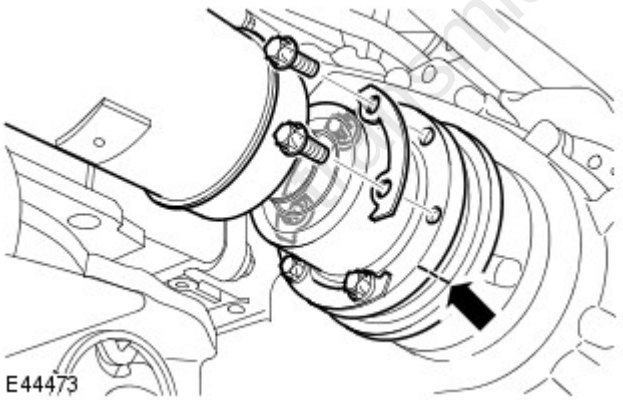
E44473

5. CAUTION: To avoid damage to the joint or gaiter, do not allow the driveshaft to hang.

• NOTE: Mark the position of the driveshaft on the transmission flange.

Release the front driveshaft from the transfer case drive flange.

- Remove the 6 Torx bolts and washers, discard the bolts.
- Using a suitable tie strap, secure the driveshaft.

transmissionmanuals.com

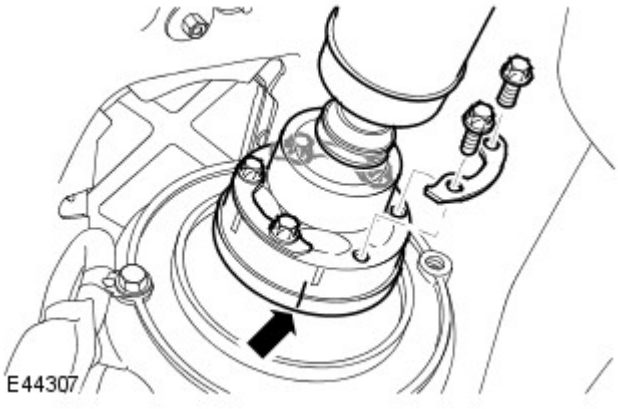

6. CAUTION: To avoid damage to the joint or gaiter, do not allow the driveshaft to hang.

• NOTE: Mark the position of the driveshaft on the transmission flange.

Release the rear driveshaft from the transfer case drive flange.

- Remove the 6 Torx bolts and washers.
- Using a suitable tie strap, secure the driveshaft.

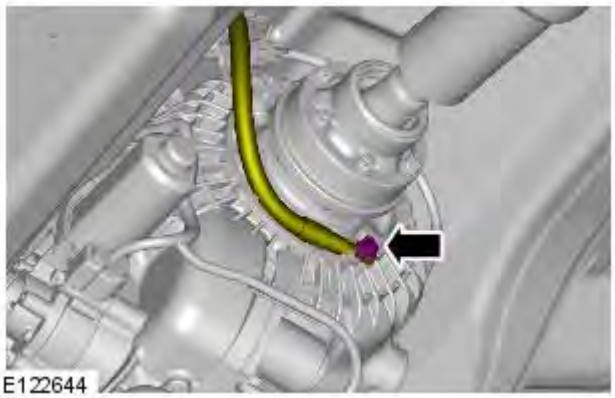

7. Remove the ground cable from the transfer box.

- Remove the bolt.

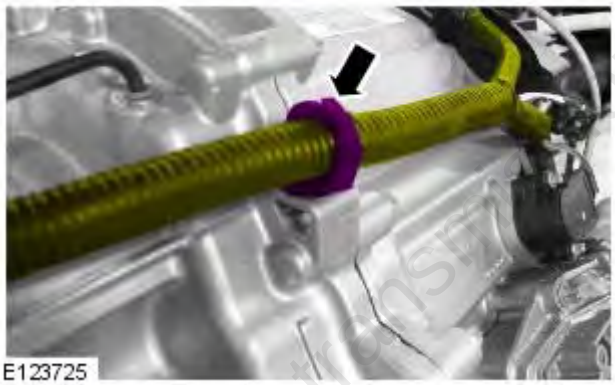

8. Release the transmission wiring harness retaining clip.

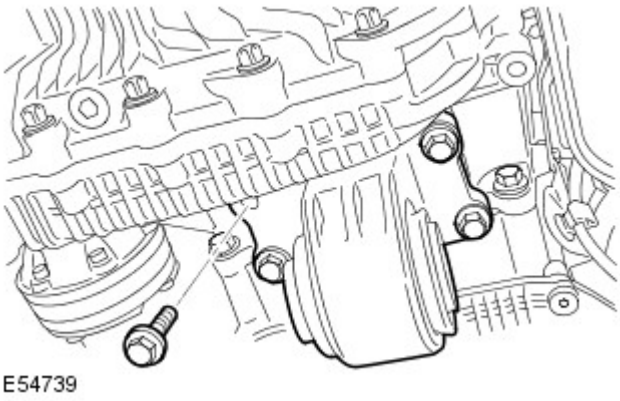

9. Remove the transmission support insulator.

- Remove the 4 bolts.

10. Disconnect the transfer case 3 electrical connectors.

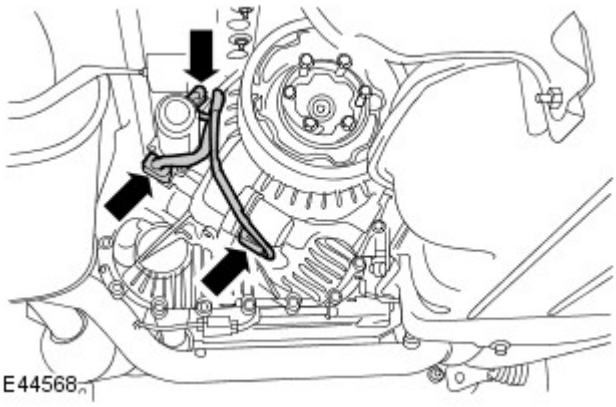

11. Release the wiring harness from the transfer case.

- Remove the 3 bolts.

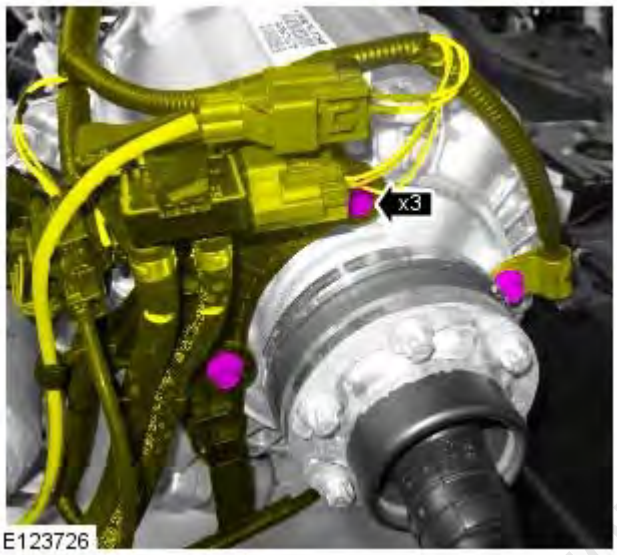

12. CAUTION: Always plug any open connections to prevent contamination.

Disconnect the breather line.

- Depress the locking ring.

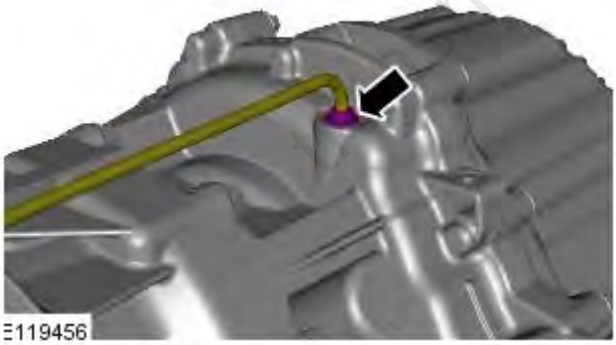

transmissionmanuals.com



E123724

13. Release the fuel line support bracket.

- Remove the 3 bolts.

14. Support the transmission on a jack.

15. WARNING: Secure the component to the transmission jack.

Using a transmission jack, support the transfer case.

16. With assistance, remove the transfer case.

- Remove the 8 bolts.
- Move the fuel hose support bracket aside.
- Remove the O-ring seal.

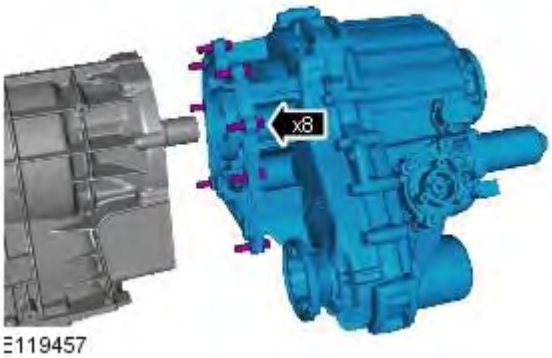

E119457

transmissionmanuals.com

Published: 11-May-2011

Transfer Case - Transfer CaseV6 4.0L Petrol

Removal

Removal

1. Disconnect the battery ground cable.
For additional information, refer to: Specifications (414-00 Battery and Charging System - General Information, Specifications).

2. WARNING: Do not work on or under a vehicle supported only by a jack. Always support the vehicle on safety stands.

Raise and support the vehicle.

3. Remove the front driveshaft.
For additional information, refer to: Front Driveshaft - V6 4.0L Petrol (205-01 Driveshaft, Removal and Installation).

4. Remove the rear driveshaft.
For additional information, refer to: Rear Driveshaft (205-01 Driveshaft, Removal and Installation).

5. Remove the transmission support insulator.

- Remove the 4 bolts.

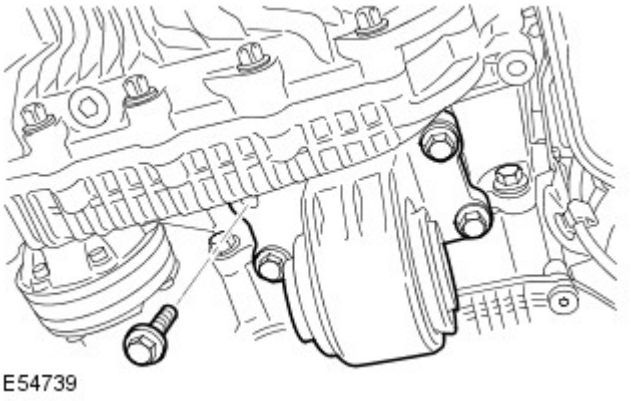

6. Disconnect the transfer case 3 electrical connections.

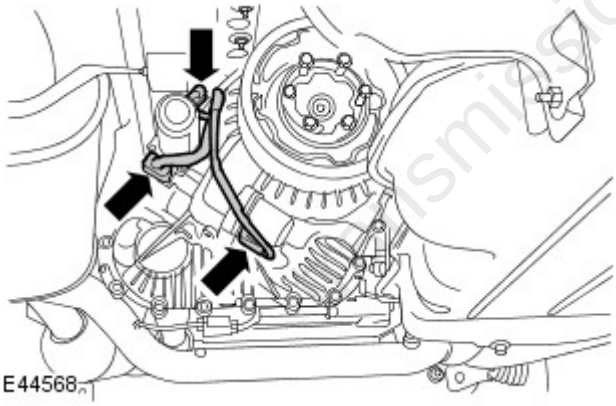

7. Release the wiring harness from the transfer case.

- Remove the 3 bolts.
- Release the clip.

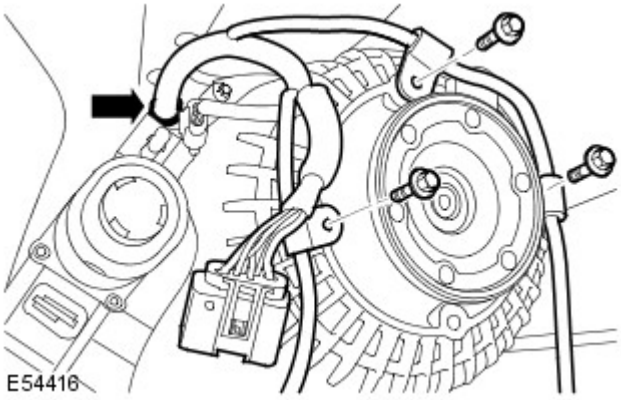

transmissionmanuals.com

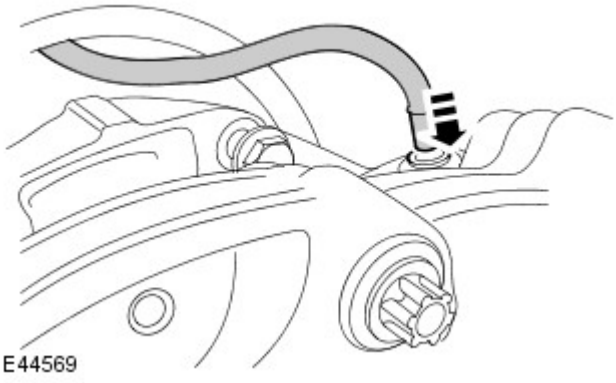
E44569

8. CAUTION: Always plug any open connections to prevent contamination.

Disconnect the breather line.

- Depress the locking ring.

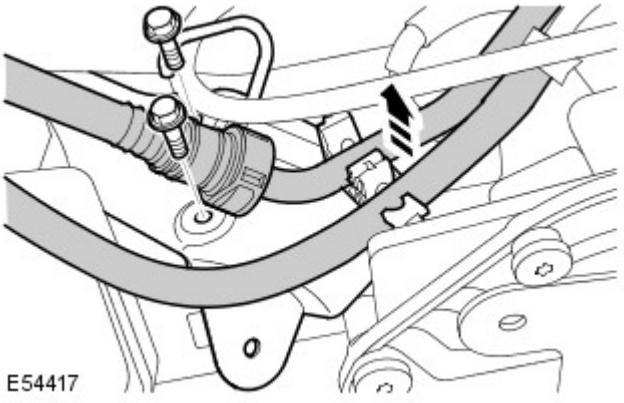
E54417

9. Release the fuel line support bracket.

- Release the fuel lines.
- Remove the 2 bolts.

10. Support the transmission on a jack.

11. WARNING: Secure the component to the transmission jack.

Using a transmission jack, support the transfer case.

12. With assistance, remove the transfer case.

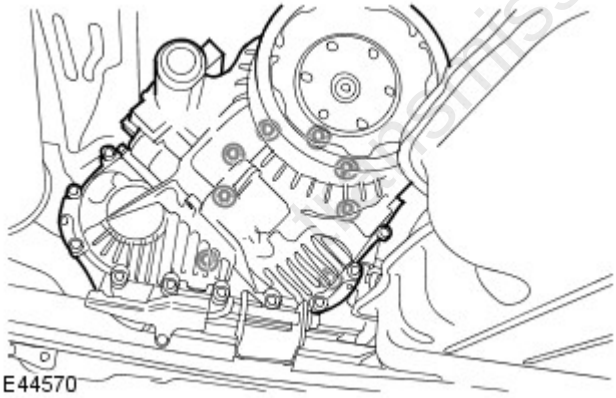
E44570

- Remove the 8 bolts.
- Move the fuel hose support bracket aside.
- Remove the O-ring seal.

transmissionmanuals.com

Published: 11-May-2011

Transfer Case - Transfer CaseV8 5.0L Petrol

Removal

Special Tool(s)	
303-1069  E53727	Wrench adaptor 303-1069

Removal

1. Disconnect the battery ground cable.
For additional information, refer to: Specifications (414-00 Battery and Charging System - General Information, Specifications).

2. WARNING: Do not work on or under a vehicle supported only by a jack. Always support the vehicle on safety stands.

Raise and support the vehicle.

3. Remove the transmission heat shield.

- Remove the 4 bolts.

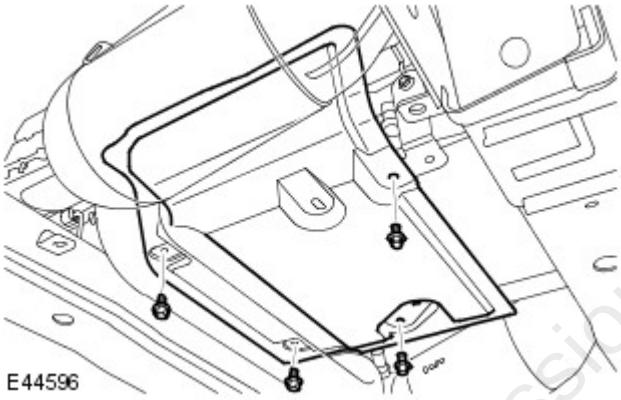

4. Remove the ground cable from the transfer box.

- Remove the bolt.

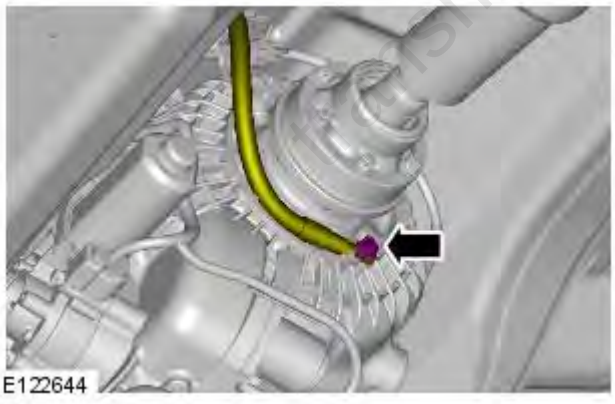

5. Remove the transmission crossmember.
For additional information, refer to: Transmission Support Crossmember - V8 5.0L Petrol (502-02 Full Frame and Body Mounting, Removal and Installation).

transmissionmanuals.com

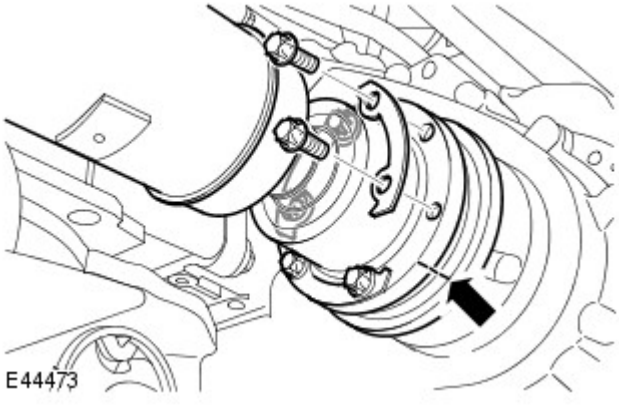

6. CAUTIONS:

Mark the position of the driveshaft flange in relation to the drive pinion flange.

To avoid damage to the joint or gaiter, do not allow the driveshaft to hang.

Release the front driveshaft from the transfer case drive flange.

- Remove the 6 Torx bolts and washers, discard the bolts.
- Using a suitable tie strap, reposition and secure the driveshaft to the exhaust system.

7. Remove the fuel tank heat shield.

- Remove the 3 bolts and 2 nuts.

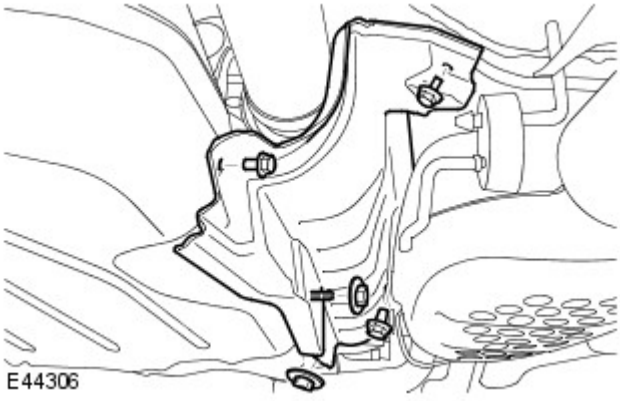

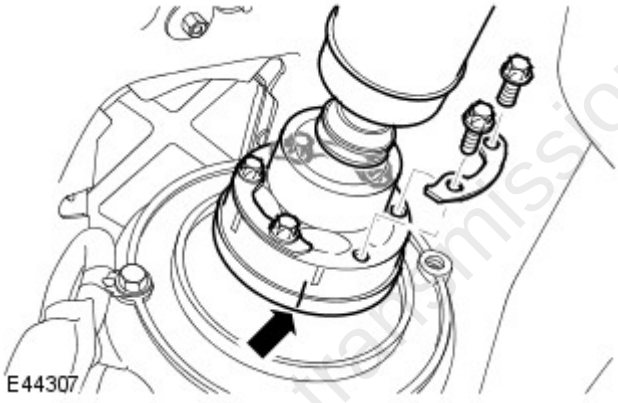

8. CAUTIONS:

Mark the position of the driveshaft flange in relation to the drive pinion flange.

To avoid damage to the joint or gaiter, do not allow the driveshaft to hang.

Release the rear driveshaft from the transfer case drive flange.

- Remove the 6 Torx bolts and washers.

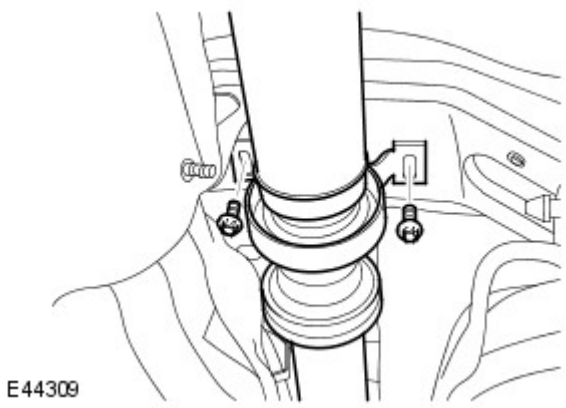

9. CAUTION: To avoid damage to the joint or gaiter, do not allow the driveshaft to hang.

Release the driveshaft center bearing mount.

- Remove the 2 driveshaft center bearing mount bolts.
- Using suitable securing strap, reposition and support the driveshaft.

transmissionmanuals.com

10. Disconnect the transfer case 3 electrical connectors.

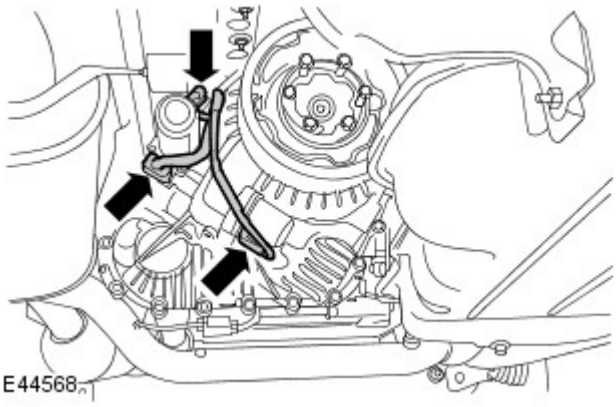

11. Release the wiring harness from the transfer case.

- Remove the 3 bolts.
- Release the clip.

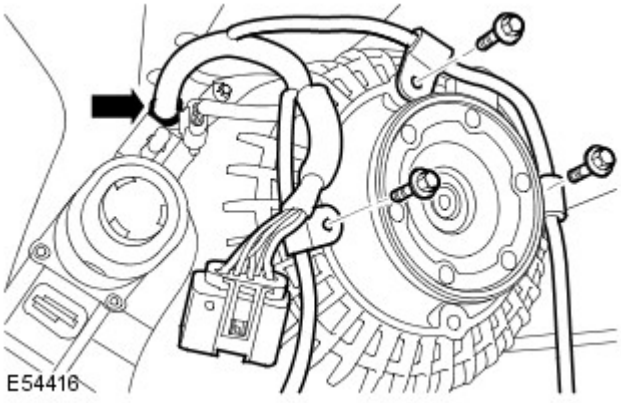

12. CAUTION: Always plug any open connections to prevent contamination.

Disconnect the breather line.

- Depress the locking ring.

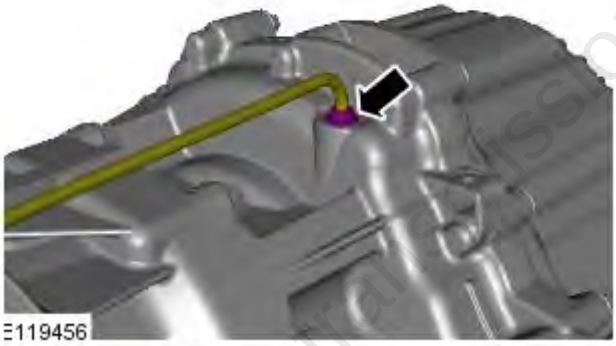

13. Release the fuel line support bracket.

- Remove the 3 bolts.



14. Support the transmission on a jack.

15. WARNING: Secure the component to the transmission jack.

transmissionmanuals.com

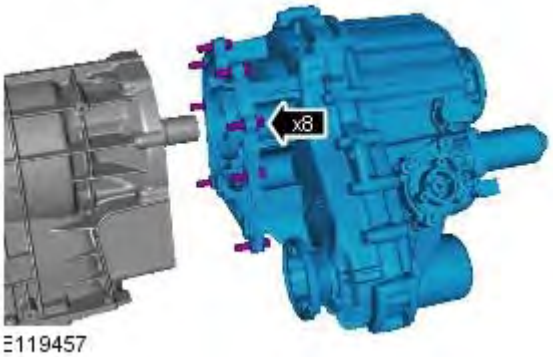

E119457

Using a transmission jack, support the transfer case.

16. With assistance, remove the transfer case.

- Remove the 8 bolts.
- Move the fuel hose support bracket aside.
- Remove the O-ring seal.

transmissionmanuals.com

Published: 11-May-2011

Transfer Case - Transfer CaseTDV6 2.7L Diesel

Installation

Special Tool(s)	
303-1069  E53727	Wrench adaptor 303-1069

Installation

All vehicles

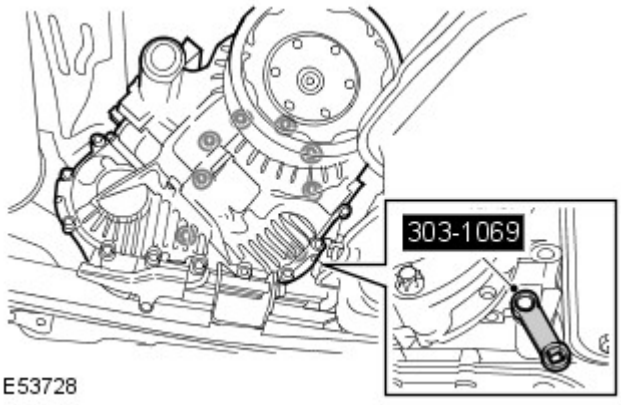

1. CAUTION: Take extra care not to damage the wiring harnesses.

With assistance, install the transfer case.

- Clean the component mating faces.
- Lubricate input shaft splines with 'Weicon TL7391' grease.
- Install the O-ring seal.
- Using the special tool, tighten the bolts to 45 Nm (33 lb.ft).

2. Connect the breather line.

3. NOTE: Some variation in the illustrations may occur, but the essential information is always correct.

Secure the wiring harness to the transfer case.

- Tighten the bolts to 25 Nm (18 lb.ft).
- Secure the clip.

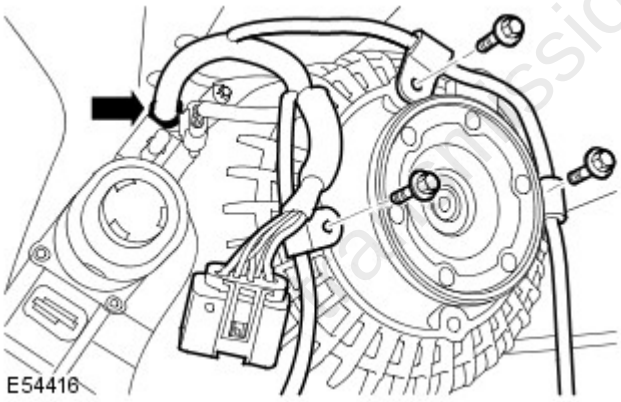

4. Secure the wiring harness to the transfer case.

- Tighten bolt to 10Nm (7 lb.ft)

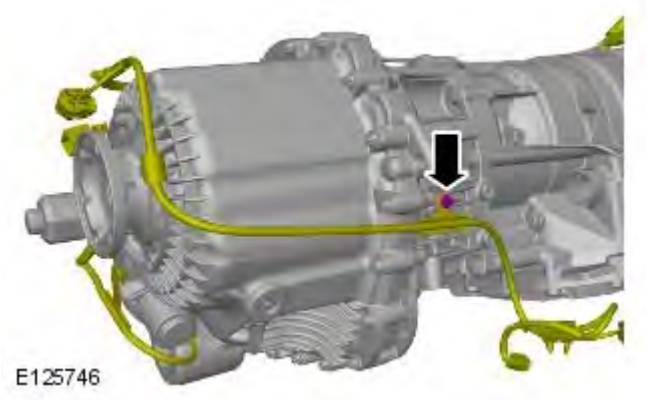

5. Connect the electrical connectors.

transmissionmanuals.com

6. Install the ground cable to the transfer box.
   - Tighten the bolt to 15Nm (11 lb.ft).
7. Secure the rear driveshaft to the transfer case drive flange.
   - Install the washers.
   - Tighten the Torx bolts to 55 Nm (40 lb.ft).
8. Secure the front driveshaft to the transfer case drive flange.
   - Install the washers.
   - Stage 1: Tighten the bolts to 45 Nm (33 lb.ft).
   - Stage 2: Tighten the bolts a further 90 degrees.
9. Install the transmission crossmember.
   For additional information, refer to: Transmission Support Crossmember - V6 4.0L Petrol/TDV6 2.7L Diesel (502-02 Full Frame and Body Mounting, Removal and Installation).

Vehicles with diesel particulate filter (DPF)

10. Install the diesel particulate filter (DPF).For additional information, refer to: Diesel Particulate Filter (DPF) (309-00A Exhaust System - TDV6 2.7L Diesel, Removal and Installation).

All vehicles

11. Connect the battery ground cable.
    For additional information, refer to: Specifications (414-00 Battery and Charging System - General Information, Specifications).
12. Check and top-up the transfer case fluid level.
13. Using the diagnostic tool, re-calibrate the transfer case.

transmissionmanuals.com

Published: 11-May-2011

Transfer Case - Transfer CaseTDV6 3.0L Diesel

Installation

Special Tool(s)	
303-1069  E53727	Wrench adaptor 303-1069

Installation

• NOTE: Some variation in the illustrations may occur, but the essential information is always correct.

All vehicles

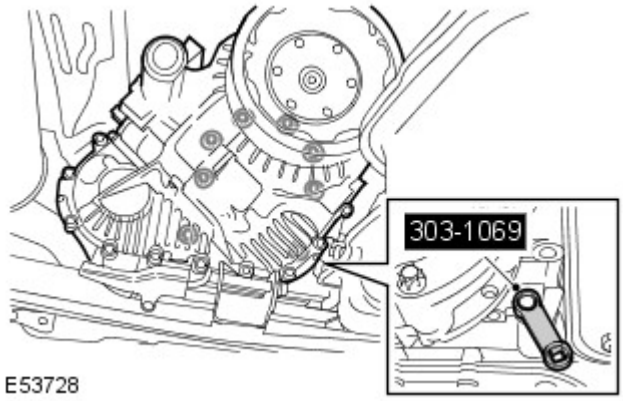

1. With assistance, install the transfer case.

- Clean the component mating faces.
- Lubricate input shaft splines with 'Weicon TL7391' grease.
- Install the O-ring seal.
- Align the fuel hose support bracket.
- Using the special tool, tighten the bolts to 45 Nm (33 lb.ft).

2. Connect the breather line.

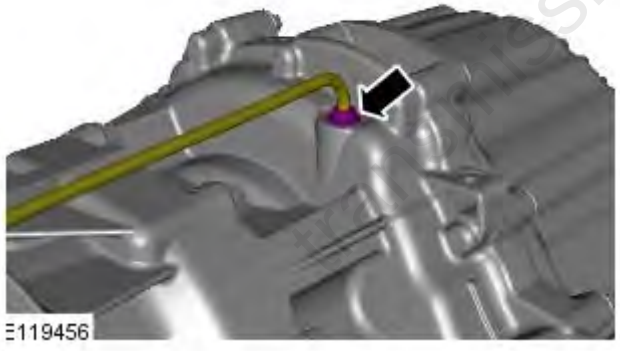

3. Secure the fuel line support bracket.

- Tighten the bolts to 10 Nm (7 lb.ft).



transmissionmanuals.com

4. Connect the electrical connectors.

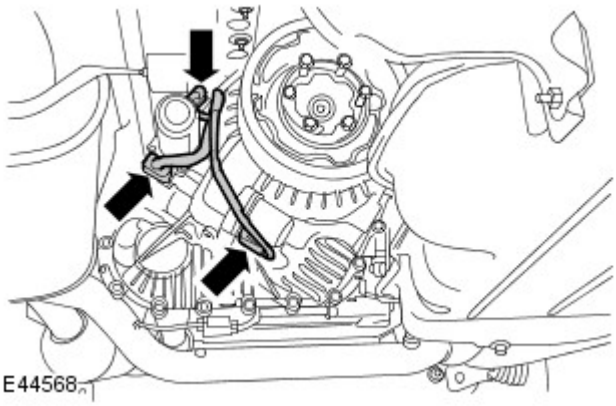
E44568

5. Secure the wiring harness to the transfer case.

- Tighten the bolts to 25 Nm (18 lb.ft).

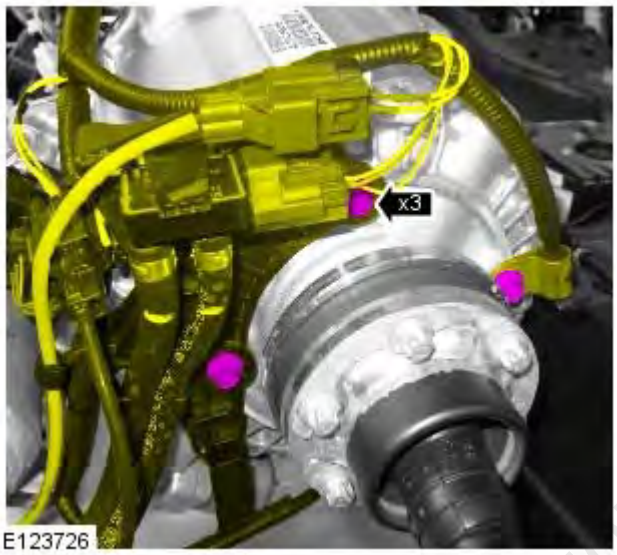

E123726

6. Install the transmission support insulator.

- Clean the component mating faces.
- Tighten the bolts to 60 Nm (44 lb.ft).

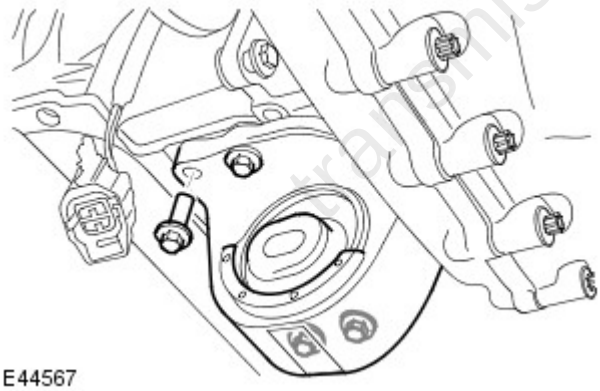
E44567

transmissionmanuals.com

7. Secure the transmission wiring harness.


E123725

8. Secure the rear driveshaft to the transfer case drive flange.

- Install the washers.
- Tighten the Torx bolts to 55 Nm (40 lb.ft).

9. Secure the front driveshaft to the transfer case drive flange.

- Install the washers.
- Stage 1: Tighten the bolts to 45 Nm (33 lb.ft).
- Stage 2: Tighten the bolts a further 90 degrees.

10. Install the ground cable to the transfer box.

- Tighten the bolt to 15Nm (11 lb.ft).

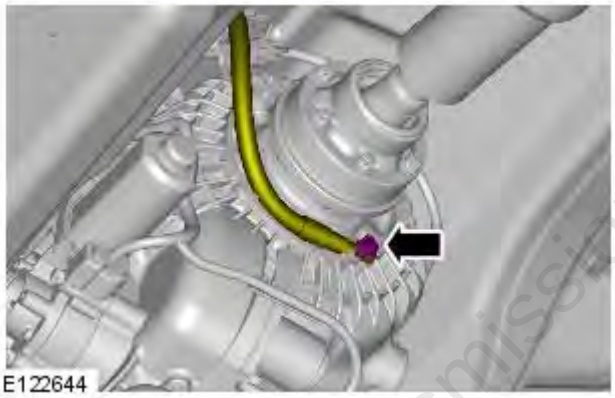
E122644

11. Install the transmission crossmember.
For additional information, refer to: Transmission Support Crossmember - TDV6 3.0L Diesel (502-02 Full Frame and Body Mounting, Removal and Installation).

Vehicles with diesel particulate filter (DPF)

12. Install the DPF.
For additional information, refer to: Diesel Particulate Filter (DPF) (309-00B Exhaust System - TDV6 3.0L Diesel, Removal and Installation).

All vehicles

13. Connect the battery ground cable.
For additional information, refer to: Specifications (414-00 Battery and Charging System - General Information, Specifications).

14. Check and top-up the transfer case fluid level.

15. Using the diagnostic tool, re-calibrate the transfer case.

transmissionmanuals.com

Published: 11-May-2011

Transfer Case - Transfer CaseV6 4.0L Petrol
Installation

Installation

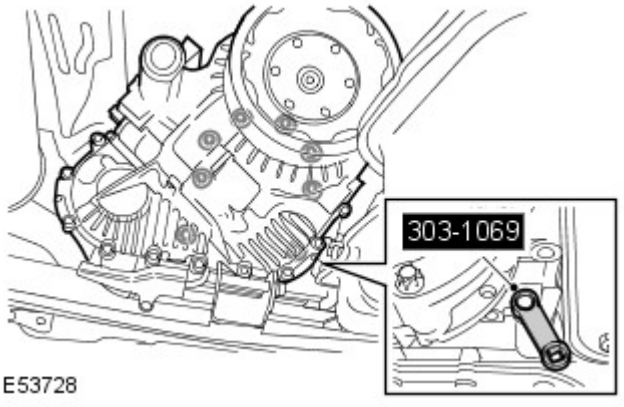

1. With assistance, install the transfer case.
   - Clean the component mating faces.
   - Lubricate input shaft splines with 'Weicon TL7391' grease.
   - Install the O-ring seal.
   - Align the fuel hose support bracket.
   - Using the special tool, tighten the bolts to 45 Nm (33 lb.ft).
2. Connect the breather line.
3. Position the fuel line support bracket.
   - Tighten the bolts to 10 Nm (7 lb.ft).
   - Secure the fuel lines.
   - Position the selector cable to its guide bracket.
4. Connect the electrical connectors.
5. Secure the wiring harness to the transfer case.
   - Secure with the clip.
   - Tighten the bolts to 25 Nm (18 lb.ft).
6. Install the transmission support insulator.
   - Clean the component mating faces.
   - Tighten the bolts to 60 Nm (44 lb.ft).
7. Install the rear driveshaft.
   For additional information, refer to: Rear Driveshaft (205-01 Driveshaft, Removal and Installation).
8. Install the front driveshaft.
   For additional information, refer to: Front Driveshaft - V6 4.0L Petrol (205-01 Driveshaft, Removal and Installation).
9. Connect the battery ground cable.
   For additional information, refer to: Specifications (414-00 Battery and Charging System - General Information, Specifications).
10. Use T4 to re-calibrate a new transfer case.

transmissionmanuals.com

Published: 11-May-2011

Transfer Case - Transfer CaseV8 5.0L Petrol

Installation

Special Tool(s)	
303-1069  E53727	Wrench adaptor 303-1069

Installation

1. With assistance, install the transfer case.

- Clean the component mating faces.
- Lubricate input shaft splines with 'Weicon TL7391' grease.
- Install the O-ring seal.
- Using the special tool, tighten the bolts to 45 Nm (33 lb.ft).

2. Connect the breather line.

3. Position the fuel line support bracket.

- Tighten the bolts to 10 Nm (7 lb.ft).
- Secure the fuel lines.

4. Connect the electrical connectors.

5. Secure the wiring harness to the transfer case.

- Secure with the clip.
- Tighten the bolts to 25 Nm (18 lb.ft).

6. Secure the front driveshaft to the transfer case drive flange.

- Stage 1: Tighten the bolts to 45 Nm (33 lb.ft).
- Stage 2: Tighten the bolts a further 90 degrees.

7. Secure the rear driveshaft to the transfer case drive flange.

- Clean the component mating faces.
- Tighten the Torx bolts to 55 Nm (40 lb.ft).

8. CAUTIONS:

Align the driveshaft center bearing mount by moving the floating front section of the shaft backward or forwards until the bolt holes in the mount align with the holes in the chassis.

Make sure the center bearing mount is not under tension.

Install the driveshaft center bearing mount bolts.

- Align the center bearing mount.
- Tighten the driveshaft center bearing retaining bolts to 30 Nm (22 lb.ft).

9. Install the fuel tank heat shield.

- Tighten the bolts to 6 Nm (4 lb.ft).
- Tighten the nuts to 3 Nm (2 lb.ft).

10. Install the ground cable to the transfer box.

transmissionmanuals.com

- Tighten the bolt to 15Nm (11 lb.ft).

11. Install the transmission heat shield.

- Tighten the bolts to 10 Nm (7 lb.ft).

12. Install the transmission crossmember.
For additional information, refer to: Transmission Support Crossmember - V8 5.0L Petrol (502-02 Full Frame and Body Mounting, Removal and Installation).

13. Connect the battery ground cable.
For additional information, refer to: Specifications (414-00 Battery and Charging System - General Information, Specifications).

14. Check and top-up the transfer case fluid level.

15. Using the diagnostic tool, re-calibrate the transfer case.

transmissionmanuals.com